Technical Construction File

File No：MD-TCF-220406-38043

Applicant:

Zhejiang Haobang Communication Technology Co. , Ltd.

Address of applicant:

No.818 Biyun Street, Bihu Town, Liandu District, Lishui City, Zhejiang Province, China

Directive: 2006/42/EC Machinery Directive

Legal Person：_____

Product: Fiber Cleaver

Model: 0708, 0709, 0711, 0712, 0713, 0715, 1716, 1717, 1718, A01, A02, C12, C15, C16, 0808, 0809, G6, G7, G8, G9, G10

Table of contents

Part I: General..... 3
1.1 List of applicable regulations and standards..... 3
1.2 Variations of the series products..... 4
1.3 Quality control system..... 5
Part II：Assessment of conformity..... 7
2.1 Essential health and safety requirements..... 7
Part III: Technical file..... 32
3.1 EN ISO 12100 &EN ISO 13849-1 Report..... 32
3.2 Airborne noise Report..... 100
3.3 EN 60204-1 Report..... 102
3.4 ATTACHMENT TO TEST REPORT IEC 60204-1..... 163
Annex：Technical Information..... 168
ANNEX 1:EC DECLARATION OF CONFORMITY..... 169
ANNEX 2: SAFETY PICTURES OF THE MACHINE..... 170

Part I: General

1.1 List of applicable regulations and standards

In order to ensure the conformity for CE marking for these machines, some main European and/or International standards have been used to make assessment of conformity, they are:

EN ISO 12100:2010 Safety of machinery - General principles for design - Risk assessment and risk reduction

EN 60204-1:2018 Safety of machinery - Electrical equipment of machines

EN ISO 13849-1:2015 Safety of machinery - Safety-related parts of control systems - Part 1: General principles for design

The test reports for these applicable standards in detail have been included in the relevant sub-clauses of this technical construction file.

1.2 Variations of the series products

0708, 0709, 0711, 0712, 0713, 0715, 1716, 1717, 1718, A01, A02, C12, C15, C16, 0808, 0809, G6, G7, G8, G9, G10

1.3 Quality control system

In order to ensure the conformity of the series production, the Zhejiang Haobang Communication Technology Co. , Ltd.has taken the related procedures mentioned below：

(1) Apply for the consultant from the qualified body in Germany

The Zhejiang Haobang Communication Technology Co. , Ltd. has applied for the consultant from Hangzhou GSG Testing Technology Service Co., Ltd who is a competent institute for the CE marking consultant and certification in China.
The complete technical construction file(TCF)have been established before applying for the CE marking certificate under the consultant of GSG.

(2) Carry out the inspection for parts and components according to the TCF

Before the assemblies of the series production, the QC engineers of Zhejiang Haobang Communication Technology Co. , Ltd. has to check and inspect the technical specifications and intended functions of parts and components to ensure the correct use of them according to the contents of TCF and principle described in the related technical information.

(3) Carry out the inspection & testing for the products before packing

Before packing the products, the QC engineers of Zhejiang Haobang Communication Technology Co. , Ltd. have to do the necessary inspection and testing to ensure the conformity of related requirements, in particularly, the testing and inspection of electrical characteristics and outer feature.

(4) Carry out the inspection for the packing

After finishing the necessary inspection and testing for the products, an inspection for the packing has to be done to ensure the necessary elements being included in this packing before shipment.

(5) Provision for the change of design

Any change of the products described in this TCF must be checked in detail and written down again in the TCF by the designer of Zhejiang Haobang Communication Technology Co. , Ltd., if the change may effects the related electrical or mechanical characteristics.

(6) Provision for the Quality Assurance

For the provisions of internal control measures to ensure the conformity of series production of the machines, Zhejiang Haobang Communication Technology Co. , Ltd. has built an internal quality control system in accordance with the international standard of ISO-9001.

TECHNICAL FILE

Essential health and safety requirements

The third Party	Hangzhou GSG Testing Technology Service Co., Ltd. Room 2006, Building 4, East Chuangzhi Building, No. 511, xiasha No.2 Big Street, Qiantang District, Hangzhou city, Zhejiang, China	Tel: / Fax: /
Name and address of the applicant	Zhejiang Haobang Communication Technology Co. , Ltd. No.818 Biyun Street, Bihu Town, Liandu District, Lishui City, Zhejiang Province, China	
Name and address of the manufacturer	Zhejiang Haobang Communication Technology Co. , Ltd. No.818 Biyun Street, Bihu Town, Liandu District, Lishui City, Zhejiang Province, China	
Name and address of the factory (production sites)	Zhejiang Haobang Communication Technology Co. , Ltd. No.818 Biyun Street, Bihu Town, Liandu District, Lishui City, Zhejiang Province, China	
Product	Fiber Cleaver	
Mode/type reference	0708, 0709, 0711, 0712, 0713, 0715, 1716, 1717, 1718, A01, A02, C12, C15, C16, 0808, 0809, G6, G7, G8, G9, G10	
Reviewed according to	Essential health and safety requirements	
Review Result	PASS	
TCF No.	MD-TCF-220406-38043	
Work carried out by	Tony Guo Director	Signature
Word verified by	Kevin Shi Manager	Signature
Date of issue	2022/04/11	

Hangzhou GSG Testing Technology Service Co., Ltd.

Part II：Assessment of conformity

2.1 Essential health and safety requirements

ESSENTIAL REQUIREMENTS ACCORDING TO ANNEX I

MACHINERY SAFETY DIRECTIVE 2006/42/EC

Article	Sub-article	Requirement	Fullfilment			Remark
			Y	N	N/A	
1	1.1.2	*Principles of safety integration* (a) Machinery must be so constructed that it is fitted for its function, and can be adjusted and maintained without putting persons at risk when these operations are carried out under the conditions foreseen by the manufacturer. The aim of measures taken must be to eliminate any risk of accident throughout the foreseeable lifetime of the machinery, including the phases of assembly and dismantling, even where risks of accident arise from foreseeable abnormal situations. (b) In selecting the most appropriate methods, the manufacturer must apply the following principles, in the order given: - eliminate or reduce risks as far as possible (inherently safe machinery design and construction), - take the necessary protection measures in relation to risks that cannot be eliminated, - inform users of the residual risks due to any shortcomings of the protection measures adopted, indicate whether any particular training is required and	☑			**Pass.** All the machines are fitted for the function. Enough protection is provided - **Pass** Manufacturer has provided enough safety devices to eliminate or reduce risks.. **Pass.** Safety guards and other devices are used. **Pass.** Enough warnings are provided

		specify any need to provide personal protection equipment. (c) When designing and constructing machinery, and when drafting the instructions, the manufacturer must envisage not only the normal use of the machinery but also uses which could reasonably be expected. The machinery must be designed to prevent abnormal use if such use would engender a risk. In other cases the instructions must draw the user's attention to ways - which experience has shown might occur - in which the machinery should not be used. (d) Under the intended conditions of use, the discomfort, fatigue and psychological stress faced by the operator must be reduced to the minimum possible taking ergonomic principles into account. (e) When designing and constructing machinery, the manufacturer must take account of the constraints to which the operator is subject as a result of the necessary or foreseeable use of personal protection equipment (such as footwear, gloves, etc.). (f) Machinery must be supplied with all the essential special equipment and accessories to enable it to be adjusted, maintained and used without risk.				in the appropriate spot **Pass.** All the conditions are considered by the manufacturer, and the related information also has been provided within the instruction **Pass.** These requirements have been complied with, and the related information also has been provided within the instruction manual. **Pass.** These requirements have been taken into account during the design of this machine
	1.1.3	*Materials and products* The materials used to construct machinery or products used and created during its use must not endanger exposed persons' safety or health. In particular, where fluids are used, machinery must be designed and constructed for use without risks due to filling, use, recovery or draining.	☑			**Pass**. They cannot endanger exposed person’s safety or health
	1.1.4	*Lighting* The manufacturer must supply integral lighting suitable for the operations concerned where its lack is likely to cause a risk despite ambient lighting of normal intensity. The manufacturer must ensure that there is no area of shadow likely to cause nuisance, that there is no irritating dazzle and that there are no dangerous stroboscopic effects due to the lighting provided by the manufacturer.	☑			**Not applicable.** No integral lighting has been used. **Not applicable.** No integral lighting has been used.

		. Internal parts requiring frequent inspection and adjustment and maintenance areas must be provided with appropriate lighting				**Not applicable.** No integral lighting has been used.
	1.1.5	*Design of machinery to facilitate its handling* Machinery or each component part thereof must: - be capable of being handled safely, - be packaged or designed so that it can be stored safely and without damage (e.g. adequate stability, special supports, etc.). Where the weight, size or shape of machinery or its various component parts prevents them from being moved by hand, the machinery or each component part must; - either be fitted with attachments for lifting gear, or - be designed so that it can be fitted with such attachments (e.g. threaded holes), or - be shaped in such a way that standard lifting gear can easily be attached. Where machinery or one of its component parts is to be moved by hand, it must: - either be easily movable, or - be equipped for picking up (e.g. hand-grips, etc.) and moving in complete safety. Special arrangements must be made for the handling of tools and/or machinery parts, even if lightweight, which could be dangerous (shape, material, etc.).			☑	- **Pass.** Enough measures have been taken to ensure the safe of the handling. **Pass.** The machine can be stored in wood box safely and without damage. **Not applicable** **Not applicable** **Not applicable** **Not applicable** **Not applicable** **Not applicable**

	1.2	**Controls**	☑			
	1.2.1	*Safety and reliability of control systems* Control systems must be designed and constructed so that they are safe and reliable, in a way that will prevent a dangerous situation arising. Above all they must be designed and constructed in such a way that: - they can withstand the rigours of normal use and external factors, - errors in logic do not lead to dangerous situations.				**Pass.** The control system for this machine is safe and reliable by appropriate designing - **Pass.** The control system can withstand related effects during normal operation. **Pass.** Any error in logic doesn't lead to dangerous situations.
	1.2.2	*Control devices* Control devices must be: - clearly visible and identifiable and appropriately marked where necessary, - positioned for safe operation without hesitation or loss of time, and without ambiguity, - designed so that the movement of the control is consistent with its effect, - located outside the danger zones, except for certain controls where necessary, such as emergency stop, console for training of robots,	☑			**Pass.** Appropriate lables and markings are provided This requirement has been complied with Pass. Appropriate positions have been taken into account during design. **Pass.** Movement of the control is consistent with its effect Pass.

		- positioned so that their operation cannot cause additional risk,				All control devices have been located outside the danger zones. **Pass.**
		- designed or protected so that the desired effect, where a risk is involved, cannot occur without an intentional operation,				All operation of control devices ’tcause additional risk. **Pass.**
		- made so as to withstand foreseeable strain; particular attention must be paid to emergency stop devices liable to be subjected to considerable strain.				ppropriate safety devices have been used to comply with this requirement. **Pass.**
		Where a control is designed and constructed to perform several different actions, namely where there is no one-to-one correspondence (e.g. keyboards, etc.), the action to be performed must be clearly displayed and subject to confirmation where necessary.				All of them can withstand foreseeable strain. **Not applicable.**
		Controls must be so arranged that their layout, travel and resistance to operation are compatible with the action to be performed, taking account of ergonomic principles.				**Pass.** These requirements have been taken into account during design.
		Constraints due to the necessary or foreseeable use of personal protection equipment (such as footwear, gloves, etc.) must be taken into account.				**Not applicable.**
		Machinery must be fitted with indicators (dials, signals, etc.) as required for safe operation. The operator must be able to read them from the control position				**Pass.** The indicators have been provided.
		From the main control position the operator must be able to ensure that there are no exposed persons in the danger zones. If this is impossible, the control system must be designed and constructed so that an acoustic and/ or visual warning signal is given whenever the machinery is about to start. The exposed person must have the time and the means to take rapid action to prevent the machinery starting up.				**Pass.** Emergency stop , main switch and other related devices have been provided for the exposed person.

	1.2.3	*Starting* It must be possible to start machinery only by voluntary actuation of a control provided for the purpose. The same requirement applies: - when restarting the machinery after a stop-page, whatever the cause, - when effecting a significant change in the operating conditions (e.g. speed, pressure, etc.), unless such restarting or change in operating conditions is without risk to exposed persons. This essential requirement does not apply to the restarting of the machinery or to the change in operating conditions resulting from the normal sequence of an automatic cycle. Where machinery has several starting controls and the operators can therefore put each other in danger, additional devices (e.g. enabling devices or selectors allowing only one part of the starting mechanism to be actuated at any one time) must be fitted to rule out such risks. It must be possible for automated plant functioning in automatic mode to be restarted easily after a stoppage once the safety conditions have been fulfilled.	☑			**Pass.** Devices preventing unintended strating have been provided. **Pass.** Reset is necessary before restaring. **Pass.** These requirements have been complied with. — **Not applicable.** **Not applicable.**
	1.2.4	*Stopping device* *Normal stopping* Each machine must be fitted with a control whereby the machine can be brought safely to a complete stop. Each workstation must be fitted with a control to stop some or all of the moving parts of the machinery, depending on the type of hazard, so that the	☑			**Pass.** A normal stop control has been provided. **Pass.** It has priority over the start

		machinery is rendered safe. The machinery's stop control must have priority over the start controls.. Once the machinery or its dangerous parts have stopped, the energy supply to the actuators concerned must be cut off				control. Pass. The stops belong to the category 0, or category 1 stops.
		Emergency stop Each machine must be fitted with one or more emergency stop devices to enable actual or impending danger to be averted. The following exceptions apply: - machines in which an emergency stop device would not lessen the risk, either because it would not reduce the stopping time or because it would not enable the special measures required to deal with the risk to be taken, - hand-held portable machines and hand-guided machines. This device must: - have clearly identifiable, clearly visible and quickly accessible controls, - stop the dangerous process as quickly as possible, without creating additional hazards, - where necessary, trigger or permit the triggering of certain safeguard movements. Once active operation of the emergency stop control has ceased following a stop command, that command must be sustained by engagement of the emergency stop device until that engagement is specifically overridden; it must not be possible to engage the device without triggering a stop command; it must be possible to disengage the device only by an appropriate operation, and disengaging the device must not restart the machinery but only permit	☑			**Pass.** These machines are fitted with one emergency stop devices. — **Not applicable.** **Not applicable.** — **Pass.** The emergency sop has red button, yellow background and maked with “emergency stop” **Pass.** The emergency stop will stop the machine as soon as it is pressed and it will not create any additional hazards. **Not applicable.**

		restarting.				
		Complex installations In the case of machinery or parts of machinery designed to work together, the manufacturer must so design and construct the machinery that the stop controls, including the emergency stop, can stop not only the machinery itself but also all equipment upstream and/or downstream if its continued operation can be dangerous.	☑			— **Not applicable.**
	1.2.5	*Mode selection* The control mode selected must override all other control systems with the exception of the emergency stop. If machinery has been designed and built to allow for its use in several control or operating modes presenting different safety levels (e.g. to allow for adjustment, maintenance, inspection, etc.), it must be fitted with a mode selector which can be locked in each position. Each position of the selector must correspond to a single operating or control mode. The selector may be replaced by another selection method which restricts the use of certain functions of the machinery to certain categories of operator (e.g. access codes for certain numerically controlled functions, etc.). If, for certain operations, the machinery must be able to operate with its protection devices neutralised, the mode selector must simultaneously: - disable the automatic control mode, - permit movements only by controls requiring sustained action, - permit the operation of dangerous moving parts only in enhanced safety conditions (e.g. reduced speed, reduced power, step-by-step, or other adequate provision) while preventing hazards from linked sequences,	☑			**Pass.** The emergency stop is effective regardless of operating modes. **Not applicable.** No this kind of mode selectionhas been found. **Not applicable.** No this kind of mode selection has been found **Not applicable.** No this kind of mode selection has been found. **Not applicable.** No this kind of mode selection has been found. **Not applicable.** **Not applicable.** **Not applicable.**

		- prevent any movement liable to pose a danger by acting voluntarily or involuntarily on the machine's internal sensors. In addition, the operator must be able to control operation of the parts he is working on at the adjustment point.				**Not applicable.** **Not applicable.** No this kind of mode selectionhas been found.
	1.2.6	*Failure of the power supply* The interruption, re-establishment after an interruption or fluctuation in whatever manner of the power supply to the machinery must not lead to a dangerous situation. In particular: - the machinery must not start unexpectedly, - the machinery must not be prevented from stopping if the command has already been given, - no moving part of the machinery or piece held by the machinery must fall or be ejected, - automatic or manual stopping of the moving parts whatever they may be must be unimpeded, - the protection devices must remain fully effective.	☑			— **Pass.** No any dangerous situation has been found. — **Pass.** The stop command has the priorityover all other devices **Pass.** No such part is found.
	1.2.7	*Failure of the control circuit* A fault in the control circuit logic, or failure of or damage to the control circuit must not lead to dangerous situations.n particular: - the machinery must not start unexpectedly, - the machinery must not be prevented from stopping if the command has already been given, - no moving part of the machinery or piece held by the machinery must fall or be ejected,	☑			

		- automatic or manual stopping of the moving parts whatever they may be must be unimpeded, - the protection devices must remain fully effective.				
	1.2.8	*Software* Interactive software between the operator and the command or control system of a machine must be user-friendly.			☑	
	1.3 1.3.1	Protection against mechanical hazards Stability Machinery, components and fittings thereof must be so designed and constructed that they are stable enough, under the foreseen operating conditions (if necessary taking climatic conditions into account) for use without risk of overturning, falling or unexpected movement. If the shape of the machinery itself or its intended installation does not offer sufficient stability, appropriate means of anchorage must be incorporated and indicated in the instructions.	☑			- - **Pass.** These requirements have been taken into account design **Not applicable.** The sufficient stability has been offered for this machine.
	1.3.2	*Risk of break-up during operation* The various parts of machinery and their linkages must be able to withstand the stresses to which they are subject when used as foreseen by the manufacturer. phenomena of fatigue, ageing, corrosion and abrasion. The durability of the materials used must be adequate for the nature of the work place foreseen by the manufacturer, in particular as regards the The manufacturer must indicate in the instructions the type and frequency of inspection and maintenance required for safety reasons. He must, where appropriate, indicate the parts subject to wear and the criteria for replacement.	☑			**Pass.** All parts of the machine can withstand related stress when they are used. **Pass.** All materials used for this machine areappropriate for their intended useand have adequate life. **Pass.** The related information has been provided within the instruction manual.

		Where a risk of rupture or disintegration remains despite the measures taken (e.g. as with grinding wheels) the moving parts must be mounted and positioned in such a way that in case of rupture their fragments will be contained. Both rigid and flexible pipes carrying fluids, particularly those under high pressure, must be able to withstand the foreseen internal and external stresses and must be firmly attached and/or protected against all manner of external stresses and strains; precautions must be taken to ensure that no risk is posed by a rupture (sudden movement, high-pressure jets, etc.). Where the material to be processed is fed to the tool automatically, the following conditions must be fulfilled to avoid risks to the persons exposed (e.g. tool breakage): - when the workpiece comes into contact with the tool the latter must have attained its normal working conditions, - when the tool starts and/or stops (intentionally or accidentally) the feed movement and the tool movement must be coordinated.				**Not applicable.** No such risk is possible. **Not applicable.** **Pass.** **Pass.**
	1.3.3	*Risks due to falling or ejected objects* Precautions must be taken to prevent risks from falling or ejected objects (e.g. workpieces, tools, cuttings, fragments, waste, etc.).	☑			
	1.3.4	*Risks due to surfaces, edges or angles* In so far as their purpose allows, accessible parts of the machinery must have no sharp edges, no sharp angles, and no rough surfaces likely to cause injury.	☑			— **Pass.** No this kind injury has been found.
	1.3.5	*Risks related to combined machinery* Where the machinery is intended to carry out several different operations with the manual removal of the piece between each operation (combined machinery), it must be designed and constructed in such a way as to enable each element to be used separately without the other elements constituting a danger or risk for the exposed person.			☑	— **Not applicable.** No this kind of combined machinery.

		For this purpose, it must be possible to start and stop separately any elements that are not protected.				**Not applicable.** No this kind of combined machinery.
	1.3.6	*Risks relating to variations in the rotational speed of tools* When the machine is designed to perform operations under different conditions of use (e.g. different speeds or energy supply), it must be designed and constructed in such a way that selection and adjustment of these conditions can be carried out safely and reliably.	☑			— **Not applicable.**
	1.3.7	*Prevention of risks related to moving parts* The moving parts of machinery must be designed, built and laid out to avoid hazards or, where hazards persist, fixed with guards or protective devices in such a way as to prevent all risk of contact which could lead to accidents. All necessary steps must be taken to prevent accidental blockage of moving parts involved in the work.	☑			— **Pass.** This kind of hazards have been prevented by appropriate guards. **Pass.** All necessary steps have been taken.
		In cases where, despite the precautions taken, a blockage is likely to occur, specific protection devices or tools, the instruction handbook and possibly a sign on the machinery should be provided by the manufacturer to enable the equipment to be safely unblocked.				**Not applicable.** No this kind of need.
	1.3.8	*Choice of protection against risks related to moving parts* Guards or protection devices used to protect against the risks related to moving parts must be selected on the basis of the type of risk. The following guidelines must be used to help make the choice. *A. Moving transmission parts* Guards designed to protect exposed persons against the risks associated with moving transmission parts (such as pulleys, belts, gears, rack and pinions, shafts, etc.) must be:	☑			— **Pass.** It is in accordance with the risk assessment.

		- either fixed, complying with requirements 1.4.1 and 1.4.2.1, or - movable, complying with requirements 1.4.1 and 1.4.2.2.A. Movable guards should be used where frequent access is foreseen.				See the related clauses. See the related clauses.
		B. Moving parts directly involved in the process Guards or protection devices designed to protect exposed persons against the risks associated with moving parts contributing to the work (such as cutting tools, moving parts of presses, cylinders, parts in the process of being machined, etc.) must be: - wherever possible fixed guards complying with requirements 1.4.1 and 1.4.2.1, - otherwise, movable guards complying with requirements 1.4.1 and 1.4.2.2.B or protection devices such as sensing devices (e.g. non-material barriers, sensor mats), remote-hold protection devices (e.g. two-hand controls), or protection devices intended automatically to prevent all or part of the operator's body from encroaching on the danger zone in accordance with requirements 1.4.1 and 1.4.3. However, when certain moving parts directly involved in the process cannot be made completely or partially inaccessible during operation owing to operations requiring nearby operator intervention, where technically possible such parts must be fitted with: - fixed guards, complying with requirements 1.4.1 and 1.4.2.1 preventing access to those sections of the parts that are not used in the work, - adjustable guards, complying with requirements 1.4.1 and 1.4.2.3 restricting access to those sections of the moving parts that are strictly for the work.	☑			
	1.4	*Required characteristics of guards and protection devices*	☑			
	1.4.1	*General requirements* Guards and protection devices must: - be of robust construction,				**Pass.** They all can be opened only

		- not give rise to any additional risk, - not be easy to by-pass or render non-operational, - be located at an adequate distance from the danger zone, - cause minimum obstruction to the view of the production process, - enable essential work to be carried out on installation and/or replacement of tools and also for maintenance by restricting access only to the area where the work has to be done, if possible without the guard or protection device having to be dismantled.				with tools. **Not applicable.** **Not applicable.**
	1.4.2 1.4.2.1	*Special requirements for guards* *Fixed guards* Fixed guards must be securely held in place. They must be fixed by systems that can be opened only with tools. Where possible, guards must be unable to remain in place without their fixings.	☑			
	1.4.2 1.4.2.2	*Movable guards* *A. Type A movable guards must* - as far as possible remain fixed to the machinery when open, - be associated with a locking device to prevent moving parts starting up as long as these parts can be accessed and to give a stop command whenever they are no longer closed.			☑	
	1.4.2 1.4.2.2	*B. Type B movable guards must be designed and incorporated into the control system so that:* - moving parts cannot start up while they are within the operator's reach, - the exposed person cannot reach moving parts once they have started up, - they can be adjusted only by means of an intentional action, such as the use of a tool, key, etc.,			☑	

		- the absence or failure of one of their components prevents starting or stops the moving parts, - protection against any risk of ejection is proved by means of an appropriate barrier.				
	1.4.2 1.4.2.3	*Adjustable guards restricting access* Adjustable guards restricting access to those areas of the moving parts strictly necessary for the work must: - be adjustable manually or automatically according to the type of work involved, - be readily adjustable without the use of tools, - reduce as far as possible the risk of ejection.			☑	
	1.4.3	*Special requirements for protection devices* Protection devices must be designed and incorporated into the control system so that:			☑	
		- moving parts cannot start up while they are within the operator's reach,				
		- the exposed person cannot reach moving parts once they have started up, - they can be adjusted only by means of an intentional action, such as the use of a tool, key, etc., - the absence or failure of one of their components prevents starting or stops the moving parts.				
	1.5 1.5.1	*Protection against other hazards* *Electricity supply* Where machinery has an electricity supply it must be designed, constructed and equipped so that all hazards of an electrical nature are or can be prevented. The specific rules in force relating to electrical equipment designed for use within certain voltage limits must apply to machinery which is subject to those limits.	☑			
	1.5.2	*Static electricity* Machinery must be so designed and constructed as to prevent or limit the build-up of potentially dangerous electrostatic charges and/or be fitted with a	☑			

		discharging system.				
	1.5.3	*Energy supply other than electricity* Where machinery is powered by an energy other than electricity (e.g. hydraulic, pneumatic or thermal energy, etc.), it must be so designed, constructed and equipped as to avoid all potential hazards associated with these types of energy.	☑			
	1.5.4	*Errors of fitting* Errors, likely to be made when fitting or refitting certain parts which could be a source of risk must be made impossible by the design of such parts or, failing this, by information given on the parts themselves and/or the housings. The same information must be given on moving parts and/or their housings where the direction of movement must be known to avoid a risk. Any further information that may be necessary must be given in the instructions. Where a faulty connection can be the source of risk, incorrect fluid connections, including electrical conductors, must be made impossible by the design or, failing this, by information given on the pipes, cables, etc. and/or connector blocks.	☑			
	1.5.5	*Extreme temperatures* Steps must be taken to eliminate any risk of injury caused by contact with or proximity to machinery parts or materials at high or very low temperatures. The risk of hot or very cold material being ejected should be assessed. Where this risk exists, the necessary steps must be taken to prevent it or, if this is not technically possible, to render it non-dangerous.			☑	
	1.5.6	*Fire* Machinery must be designed and constructed to avoid all risk of fire or overheating posed by the machinery itself or by gases, liquids, dust, vapours or other substances produced or used by the machinery.			☑	
	1.5.7	*Explosion* Machinery must be designed and constructed to avoid any risk of explosion posed by the machinery itself or by gases, liquids, dust, vapours or other substances produced or used by the machinery.			☑	

		To that end the manufacturer must take steps to: - avoid a dangerous concentration of products, - prevent combustion of the potentially explosive atmosphere, - minimise any explosion which may occur so that it does not endanger the surroundings. The same precautions must be taken if the manufacturer foresees the use of the machinery in a potentially explosive atmosphere. Electrical equipment forming part of the machinery must conform, as far as the risk from explosion is concerned, to the provision of the specific Directives in force.				
	1.5.8	*Noise* Machinery must be so designed and constructed that risks resulting from the emission of airborne noise are reduced to the lowest level taking account of technical progress and the availability of means of reducing noise, in particular at source.	☑			
	1.5.9	*Vibration* Machinery must be so designed and constructed that risks resulting from vibrations produced by the machinery are reduced to the lowest level, taking account of technical progress and the availability of means of reducing vibration, in particular at source.			☑	
	1.5.10	*Radiation* Machinery must be so designed and constructed that any emission of radiation is limited to the extent necessary for its operation and that the effects on exposed persons are non-existent or reduced to non-dangerous proportions.			☑	
	1.5.11	*External radiation* Machinery must be so designed and constructed that external radiation does not interfere with its operation.			☑	
	1.5.12	*Laser equipment* Where laser equipment is used, the following provisions should be taken into account:			☑	

		- laser equipment on machinery must be designed and constructed so as to prevent any accidental radiation, - laser equipment on machinery must be protected so that effective radiation, radiation produced by reflection or diffusion and secondary radiation do not damage health, - optical equipment for the observation or adjustment of laser equipment on machinery must be such that no health risk is created by the laser rays.				
	1.5.13	*Emissions of dust, gases, etc* Machinery must be so designed, constructed and/or equipped that risks due to gases, liquids, dust, vapours and other waste materials which it produces can be avoided. Where a hazard exists, the machinery must be so equipped that the said substances can be contained and/or evacuated. Where machinery is not enclosed during normal operation, the devices for containment and/or evacuation must be situated as close as possible to the source emission.			☑	Adequate design and construction have bee taken All the condition has been considered
	1.5.14	*Risk of being trapped in a machine* Machinery must be designed, constructed or fitted with a means of preventing an exposed person from being enclosed within it or, if that is impossible, with a means of summoning help.	☑			
	1.5.15	*Risk of slipping, tripping or falling* Parts of the machinery where persons are liable to move about or stand must be designed and constructed to prevent persons slipping, tripping or falling on or off these parts.			☑	
	1.6 1.6.1	*Maintenance* *Machinery maintenance* Adjustment, lubrication and maintenance points must be located outside danger zones. It must be possible to carry out adjustment, maintenance, repair, cleaning and servicing operations while machinery is at a standstill. If one or more of the above conditions cannot be satisfied for technical reasons, these operations must be possible without risk (see 1.2.5). In the case of automated machinery and, where necessary, other machinery, the manufacturer must make provision for a connecting device for mounting diagnostic fault-finding equipment.	☑			

		Automated machine components which have to be changed frequently, in particular for a change in manufacture or where they are liable to wear or likely to deteriorate following an accident, must be capable of being removed and replaced easily and in safety. Access to the components must enable these tasks to be carried out with the necessary technical means (tools, measuring instruments, etc.) in accordance with an operating method specified by the manufacturer.				
	1.6.2	*Access to operating position and servicing points* The manufacturer must provide means of access (stairs, ladders, catwalks, etc.) to allow access in safety to all areas used for production, adjustment and maintenance operations.	☑			Appropriate guards and safety control device have been used
	1.6.3	*Isolation of energy sources* All machinery must be fitted with means to isolate it from all energy sources. Such isolators must be clearly identified. They must be capable of being locked if reconnection could endanger exposed persons. In the case of machinery supplied with electricity through a plug capable of being plugged into a circuit, separation of the plug is sufficient. The isolator must be capable of being locked also where an operator is unable, from any of the points to which he has access, to check that the energy is still cut off. After the energy is cut off, it must be possible to dissipate normally any energy remaining or stored in the circuits of the machinery without risk to exposed persons. As an exception to the above requirements, certain circuits may remain connected to their energy sources in order, for example, to hold parts, protect information, light interiors, etc. In this case, special steps must be taken to ensure operator safety.	☑			The power switch has been used
	1.6.4	*Operator intervention* Machinery must be so designed, constructed and equipped that the need for operator intervention is limited. If operator intervention cannot be avoided, it must be possible to carry it out easily and in safety.	☑			
	1.6.5	*Cleaning of internal parts*	☑			

		The machinery must be designed and constructed in such a way that it is possible to clean internal parts which have contained dangerous substances or preparations without entering them; any necessary unblocking must also be possible from the outside. If it is absolutely impossible to avoid entering the machinery, the manufacturer must take steps during its construction to allow cleaning to take place with the minimum of danger.				
	1.7 1.7.0	*Indicators* *Information devices* The information needed to control machinery must be unambiguous and easily understood. It must not be excessive to the extent of overloading the operator. Where the health and safety of exposed persons may be endangered by a fault in the operation of unsupervised machinery, the machinery must be equipped to give an appropriate acoustic or light signal as a warning.	☑			
	1.7.1	*Warning devices* Where machinery is equipped with warning devices (such as signals, etc.), these must be unambiguous and easily perceived. The operator must have facilities to check the operation of such warning devices at all times. The requirements of the specific Directives concerning colours and safety signals must be complied with.	☑			
	1.7.2	*Warning of residual risks* Where risks remain despite all the measures adopted or in the case of potential risks which are not evident (e.g. electrical cabinets, radioactive sources, bleeding of a hydraulic circuit, hazard in an unseen area, etc.), the manufacturer must provide warnings. Such warnings should preferably use readily understandable pictograms and/or be drawn up in one of the languages of the country in which the machinery is to be used, accompanied, on request, by the languages understood by the operators.			☑	
	1.7.3	*Marking*	☑			

		All machinery must be marked legibly and indelibly with the following minimum particulars: - name and address of the manufacturer, - the CE marking (see Annex III), - designation of series or type, - serial number, if any, - the year of construction. Furthermore, where the manufacturer constructs machinery intended for use in a potentially explosive atmosphere, this must be indicated on the machinery. Machinery must also bear full information relevant to its type and essential to its safe use (e.g. maximum speed of certain rotating parts, maximum diameter of tools to be fitted, mass, etc.). Where a machine part must be handled during use with lifting equipment, its mass must be indicated legibly, indelibly and unambiguously. The interchangeable equipment referred to in the third indent of Article 1(2)(a), must bear the same information.				
	1.7.4	*Instructions* (a) All machinery must be accompanied by instructions including at least the following: - a repeat of the information with which the machinery is marked, except the serial number (see 1.7.3) together with any appropriate additional information to facilitate maintenance (e.g. addresses of the importer, repairers, etc.), - foreseen use of the machinery within the meaning of 1.1.2(c), - workstation(s) likely to be occupied by operators, - instructions for safe: - putting into service, - use,	☑			User manual in English provided

		- handling, giving the mass of the machinery and its various parts where they are regularly to be transported separately, - assembly, dismantling, - adjustment - maintenance (servicing and repair), - where necessary, training instructions, - where necessary, the essential characteristics of tools which may be fitted to the machinery. Where necessary, the instructions should draw attention to ways in which the machinery should not be used. (b) The instructions must be drawn up in one of the Community languages by the manufacturer or his authorised representative established in the Community. On being put into service, all machinery must be accompanied by a translation of the instructions in the language or languages of the country in which the machinery is to be used and by the instructions in the original language. This translation must be done either by the manufacturer or his authorised representative established in the Community or by the person introducing the machinery into the language area in question. By way of derogation from this requirement, the maintenance instructions for use by specialised personnel employed by the manufacturer or his authorised representative established in the Community may be drawn up in only one of the Community languages understood by that personnel. (c) The instructions must contain the drawings and diagrams necessary for putting into service, maintenance, inspection, checking of correct operation and, where appropriate, repair of the machinery, and all useful instructions in particular with regard to safety. (d) Any literature describing the machinery must not contradict the instructions as regards safety aspects. The technical documentation describing the machinery must give information regarding the airborne noise emissions referred to in (f) and, in the case of hand-held and/or hand-guided machinery, information regarding vibration as referred to in 2.2. (e) Where necessary, the instructions must give the requirements relating to installation and assembly for reducing noise or vibration (e.g. use of dampers, type and mass of foundation block, etc.).					

		(f) The instructions must give the following information concerning airborne noise emissions by the machinery, either the actual value or a value established on the basis of measurements made on identical machinery: - equivalent continuous A-weighted sound pressure level at workstations, where this exceeds 70 dB(A); where this level does not exceed 70 dB(A), this fact must be indicated, - peak C-weighted instantaneous sound pressure value at workstations, where this exceeds 63 Pa (130 dB in relation to 20 mPa), - sound power level emitted by the machinery where the equivalent continuous A-weighted sound pressure level at workstations exceeds 85 dB(A). In the case of very large machinery, instead of the sound power level, the equivalent continuous sound pressure levels at specified positions around the machinery may be indicated. Where the harmonised standards are not applied, sound levels must be measured using the most appropriate method for the machinery. The manufacturer must indicate the operating conditions of the machinery during measurement and what methods have been used for the measurement. Where the workstation(s) are undefined or cannot be defined, sound pressure levels must be measured at a distance of 1 metre from the surface of the machinery and at a height of 1,60 metres from the floor or access platform. The position and value of the maximum sound pressure must be indicated. (g) If the manufacturer foresees that the machinery will be used in a potentially explosive atmosphere, the instructions must give all the necessary information. (h) In the case of machinery which may also be intended for use by non-professional operators, the wording and layout of the instructions for use, whilst respecting the other essential requirements mentioned above, must take into account the level of general education and acumen that can reasonably be expected from such operators.				
Technical construction file shall be retained and kept available for the competent national authorities for at least 10 years following the date of manufacture of the machinery or of the last unit produced.		☑				
Safety measures for fulfilling the product conformity requirements		☑				

- Critical components shall be checked for every purchasing order if it is comply with the critical component list and relevant conformance and requirements are considered during incoming inspection. - Production flow chart and quality control plans - Regulatory compliance records for the released machinery. (Availability and compliance) ¤ Relevant warning signs ¤ CE Conformity mark ¤ User manual ¤ Relevant circuit diagrams ¤ Relevant accessories, tools and apparatus ¤ Functional tests ¤ Mechanical tests ¤ Electrical safety tests				

TECHNICAL FILE

EN ISO 12100:2010 Safety of machinery - General principles for design - Risk assessment and risk reduction
EN ISO 13849-1:2015 Safety of machinery - Safety-related parts of control systems - Part 1: General principles for design

The third party	Hangzhou GSG Testing Technology Service Co., Ltd. Room 2006, Building 4, East Chuangzhi Building, No. 511,xiasha No. 2 Big Street, Qiantang District, Hangzhou city, Zhejiang, China	Tel: / Fax /
Name and address of the applicant	Zhejiang Haobang Communication Technology Co. , Ltd. No.818 Biyun Street, Bihu Town, Liandu District, Lishui City, Zhejiang Province, China	
Name and address of the manufacturer	Zhejiang Haobang Communication Technology Co. , Ltd. No.818 Biyun Street, Bihu Town, Liandu District, Lishui City, Zhejiang Province, China	
Name and address of the factory (production sites)	Zhejiang Haobang Communication Technology Co. , Ltd. No.818 Biyun Street, Bihu Town, Liandu District, Lishui City, Zhejiang Province, China	
Product	Fiber Cleaver	
Mode/type reference	0708, 0709, 0711, 0712, 0713, 0715, 1716, 1717, 1718, A01, A02, C12, C15, C16, 0808, 0809, G6, G7, G8, G9, G10	
Reviewed according to	EN ISO 12100:2010, EN ISO 13849-1:2015	
Review Result	ASS	
Review Report No.	MD-TCF-220406-38043	
Work carried out by	Tony Guo Director	Signature:
Word verified by	Kevin Shi Manager	Signature:
Date of issue	2022/04/11	

Part III: Technical file

3.1 EN ISO 12100 &EN ISO 13849-1 Report

EN ISO 12100:2010			
Clause	Requirement – Test	Result - Remark	Verdict
4.	Strategy for risk assessment and risk reduction		
	To implement risk assessment and risk reduction the designer shall take the following actions, in the order given:	According to the strategy.	Pass
	a) determine the limits of the machinery, which include the intended use and any reasonably foreseeable misuse thereof;	According to the strategy.	Pass
	b) identify the hazards and associated hazardous situations;	According to the strategy.	Pass
	c) estimate the risk for each identified hazard and hazardous situation;	According to the strategy.	Pass
	d) evaluate the risk and take decisions about the need for risk reduction;	According to the strategy.	Pass
	e) eliminate the hazard or reduce the risk associated with the hazard by means of protective measures.Actions a) to d) are related to risk assessment and e) to risk reduction.	According to the strategy.	Pass
	Risk assessment is a series of logical steps to enable, in a systematic way, the analysis and evaluation of the risks associated with machinery. Risk assessment is followed, whenever necessary, by risk reduction. Iteration of this process can be necessary to eliminate hazards as far as practicable and to adequately reduce risks by the implementation of protective measures.		Pass
	Protective measures are the combination of the measures implemented by the designer and the user in accordance with Figure 2. Measures which can be incorporated at the design stage are preferable to those implemented by the user and usually prove more effective.		Pass

	The objective to be met is the greatest practicable risk reduction, taking into account the four below factors. The strategy defined in this clause is represented by the flowchart in Figure 1. The process itself is iterative and several successive applications can be necessary to reduce the risk, making the best use of available technology. In carrying out this process, it is necessary to take into account these four factors, in the following order of preference:		Pass
	- the safety of the machine during all the phases of its life		Pass
	cycle;		Pass
	—the ability of the machine to perform its function;		Pass
	—the usability of the machine;		Pass
	—the manufacturing, operational and dismantling costs of the machine.		Pass
5.	Risk assessment		—
5.1	General		—
	Risk assessment comprises (see Figure1)	According to the strategy.	Pass
	- risk analysis, comprising		
	1) determination of the limits of the machinery (see 5.3),		Pass
	2) hazard identification (5.4 and Annex B), and		Pass
	3) risk estimation (see 5.5), and		Pass
	- risk evaluation (see 5.6).		Pass
	Risk analysis provides information required for the risk evaluation, which in turn allows judgments to be made about whether or not risk reduction is required.		Pass
	These judgments shall be supported by a qualitative or, where appropriate, quantitative estimate of the risk associated with the hazards present on the machinery.		Pass
	The risk assessment shall be documented according to Clause 7.		Pass
5.2	Information for risk assessment		—
	The information for risk assessment should include the following.	According to the strategy.	—
	a) Related to machinery description:		—

	1) user specifications;		Pass
	2) anticipated machinery specifications, including		Pass
	i) a description of the various phases of the whole life cycle of the machinery,		Pass
	ii) design drawings or other means of establishing the nature of the machinery, and		Pass
	iii) required energy sources and how they are supplied;		Pass
	3) documentation on previous designs of similar machinery, if relevant;		N/A
	4) information for use of the machinery, as available.	See instruction	Pass
	b) Related to regulations, standards and other applicable documents:		—
	1) applicable regulations;		Pass
	2) relevant standards;		Pass
	3) relevant technical specifications;		Pass
	4) relevant safety data sheets.		Pass
	c) Related to experience of use:		—
	1) any accident, incident or malfunction history of the actual or similar machinery;		Pass
	2) the history of damage to health resulting, for example, from emissions (noise, vibration, dust, fumes,etc.), chemicals used or materials processed by the machinery;		Pass
	3) the experience of users of similar machines and, whenever practicable, an exchange of information with the potential users.		Pass
	d) Relevant ergonomic principles.		—
	The information shall be updated as the design develops or when modifications to the machine are required.	According to the strategy.	Pass
	Comparisons between similar hazardous situations associated with different types of machinery are often possible, provided that sufficient information about hazards and accident circumstances in those situations is available.		Pass

	For quantitative analysis, data from databases, handbooks, laboratories or manufacturers' specifications may be used, provided that there is confidence in the suitability of the data. Uncertainty associated with these data shall be indicated in the documentation (see Clause 7).		Pass
5.3	Determination of limits of machinery		—
5.3.1	General		—
	Risk assessment begins with the determination of the limits of the machinery, taking into account all the phases of the machinery life. This means that the characteristics and performances of the machine or a series of machines in an integrated process, and the related people, environment and products, should be identified in terms of the limits of machinery as given in 5.3.2 to 5.3.5	According to the strategy.	Pass
5.3.2	Use limits		—
	Use limits include the intended use and the reasonably foreseeable misuse. Aspects to be taken into account include the following:		Pass
	a) the different machine operating modes and different	See the instruction	Pass
	intervention procedures for the users, including interventions required by malfunctions of the machine;		
	b) the use of the machinery (for example, industrial, non-industrial and domestic) by persons identified by sex, age, dominant hand usage, or limiting physical abilities (visual or hearing impairment, size, strength,etc.);		Pass
	c) the anticipated levels of training, experience or ability of users including		Pass
	1) operators,		Pass
	2) maintenance personnel or technicians,		Pass
	3) trainees and apprentices, and		Pass
	4) the general public;		Pass
	d) exposure of other persons to the hazards associated		Pass

	with the machinery where it can be reasonably foreseen:		
	1) persons likely to have a good awareness of the specific hazards, such as operators of adjacent machinery;		Pass
	2) persons with little awareness of the specific hazards but likely to have a good awareness of site safety procedures, authorized routes, etc., such as administration staff;		Pass
	3) persons likely to have very little awareness of the machine hazards or the site safety procedures, such as visitors or members of the general public, including children.		Pass
	If specific information is not available in relation to b), above, the manufacturer should take into account general information on the intended user population (for example, appropriate anthropometric data).		N/A
	5.3.3 Space limits		—
	Aspects of space limits to be taken into account include		
	a) the range of movement,		Pass
	b) space requirements for persons interacting with the machine, such as during operation and maintenance,		Pass
	c) human interaction such as the operator-machine interface, and		Pass
	d) the machine-power supply interface.		Pass
5.3.4	Time limits		—
	Aspects of time limits to be taken into account include:		

	a) the life limit of the machinery and/or of some of its components (tooling, parts that can wear, electromechanical components, etc.), taking into account its intended use and reasonably foreseeable misuse, and		Pass
	b) recommended service intervals.		Pass
5.3.5	Other limits		—
	Examples of other limits include:		—
	a) properties of the material(s) to be processed,		N/A
	b) housekeeping — the level of cleanliness required, and		N/A
	c) environmental — the recommended minimum and maximum temperatures, whether the machine can be operated indoors or outdoors, in dry or wet weather, in direct sunlight, tolerance to dust and wet, etc	See the instruction	Pass
5.4	Hazard identification		—
	After determination of the limits of the machinery, the essential step in any risk assessment of the machinery is the systematic identification of reasonably foreseeable hazards (permanent hazards and those which can appear unexpectedly), hazardous situations and/or hazardous events during all phases of the machine life cycle, i.e.:		Pass
	- transport, assembly and installation;		Pass
	-commissioning;		Pass
	- use;		Pass
	- dismantling, disabling and scrapping.		Pass
	Only when hazards have been identified can steps be taken to eliminate them or to reduce risks. To accomplish this hazard identification, it is necessary to identify the operations to be performed by the machinery and the tasks to be performed by persons who interact with it, taking into account the different parts, mechanisms or functions of the machine, the materials to be processed, if any, and the environment in which the machine can be used.		Pass
	The designer shall identify hazards taking into account the following.		
	a) Human interaction during the whole life cycle of the machine		—

	Task identification should consider all tasks associated with every phase of the machine life cycle as given	According to the strategy.	Pass
	above. Task identification should also take into account, but not be limited to, the following task categories:		
	-setting;		Pass
	- testing;		Pass
	- teaching/programming;		Pass
	- process/tool changeover;		Pass
	- start-up;		Pass
	- all modes of operation;		Pass
	- feeding the machine;		Pass
	- removal of product from machine;		Pass
	- stopping the machine;		Pass
	-stopping the machine in case of emergency;		Pass
	- recovery of operation from jam or blockage;		Pass
	-restart after unscheduled stop;		Pass
	-fault-finding/trouble-shooting (operator intervention);		Pass
	-cleaning and housekeeping;		Pass
	- preventive maintenance;		Pass
	-corrective maintenance		Pass
	All reasonably foreseeable hazards, hazardous situations or hazardous events associated with the various tasks shall then be identified. Annex B gives examples of hazards, hazardous situations and hazardous events to assist in this process. Several methods are available for the systematic identification of hazards. See also ISO/TR 14121-2.		Pass
	In addition, reasonably foreseeable hazards, hazardous situations or hazardous events not directly related to tasks shall be identified.		Pass
	b) Possible states of the machine		—
	These are as follows:		—

	1) the machine performs the intended function (the machine operates normally);		Pass
	2) the machine does not perform the intended function (i.e. it malfunctions) due to a variety of reasons,including		Pass
	- variation of a property or of a dimension of the processed material or of the workpiece,		Pass
	- failure of one or more of its component parts or services,		Pass
	- external disturbances (for example, shocks, vibration, electromagnetic interference),		Pass
	- design error or deficiency (for example, software		Pass
	errors),		Pass
	- disturbance of its power supply, and		Pass
	-surrounding conditions (for example, damaged floor surfaces).		Pass
	c) Unintended behaviour of the operator or reasonably foreseeable misuse of the machine		—
	Examples include - loss of control of the machine by the operator (especially for hand-held or mobile machines),		Pass
	- reflex behaviour of a person in case of malfunction, incident or failure during the use of the machine,		Pass
	- behaviour resulting from lack of concentration or carelessness,		Pass
	- behaviour resulting from taking the "line of least resistance" in carrying out a task,		Pass
	- behaviour resulting from pressures to keep the machine running in all circumstances, and		Pass
	- behaviour of certain persons (for example, children, disabled persons).		Pass
5.5	Risk estimation		—
5.5.1	General		—

	After hazard identification, risk estimation shall be carried out for each hazardous situation by determining the elements of risk given in 5.5.2. When determining these elements, it is necessary to take into account then aspects given in 5.5.3.	According to the strategy.	Pass
	If standardized (or other suitable) measurement methods exist for an emission, they should be used, in conjunction with existing machinery or prototypes, to determine emission values and comparative emission data. This makes it possible for the designer to	According to the strategy.	Pass
	-estimate the risk associated with the emissions,		Pass
	-evaluate the effectiveness of the protective measures implemented at the design stage,		Pass
	-provide potential buyers with quantitative information on emissions in the technical documentation, and		Pass
	- provide users with quantitative information on emissions in the information for use.		Pass
	Hazards other than emissions that are described by measurable parameters can be dealt with in a similar manner.		Pass
5.5.2	Elements of risk		—
5.5.2.1	General		—
	The risk associated with a particular hazardous situation depends on the following elements: a) the severity of harm;	According to the strategy .	Pass
	b) the probability of occurrence of that harm, which is a function of 1) the exposure of person(s) to the hazard, 2) the occurrence of a hazardous event, and 3) the technical and human possibilities to avoid or limit the harm.		Pass
5.5.2.2	Severity of harm		—
	The severity can be estimated by taking into account the following: a) the severity of injuries or damage to health, for example, -slight, -serious, - death.		Pass

	b) the extent of harm, for example, to - one person, - several persons.		Pass
	When carrying out a risk assessment, the risk from the most likely severity of the harm that is likely to occur from each identified hazard shall be considered, but the highest foreseeable severity shall also be taken into account, even if the probability of such an occurrence is not high.		Pass
5.5.2.3	Probability of occurrence of harm		—
5.5.2.3. 1	Exposure of persons to the hazard		—
	The exposure of a person to the hazard influences the probability of the occurrence of harm. Factors to be taken into account when estimating the exposure are, among others,	According to the strategy.	Pass
	a) the need for access to the hazard zone (for normal operation, correction of malfunction, maintenance or repair, etc.),		Pass
	b) the nature of access (for example, manual feeding of materials),		Pass
	c) the time spent in the hazard zone,		Pass
	d) the number of persons requiring access, and		Pass
	e) the frequency of access.		Pass
5.5.2.3. 2	Occurrence of a hazardous event		—
	The occurrence of a hazardous event influences the probability of occurrence of harm. Factors to be taken into account when estimating the occurrence of a hazardous event are, among others, a) reliability and other statistical data, b) accident history, c) history of damage to health, and d) comparison of risks (see 5.6.3).	According to the strategy.	
5.5.2.3. 3	Possibility of avoiding or limiting harm		—

	The possibility of avoiding or limiting harm influences the probability of occurrence of harm. Factors to be taken into account when estimating the possibility of avoiding or limiting harm are, among others, the following:	According to the strategy.	Pass
	a) different persons who can be exposed to the hazard(s), for example, - skilled, - unskilled;		Pass
	b) how quickly the hazardous situation could lead to harm, for example, - suddenly, - quickly, - slowly;		Pass
	c) any awareness of risk, for example, - by general information, in particular, information for use, - by direct observation, - through warning signs and indicating devices, in particular, on the machinery;		Pass
	d) the human ability to avoid or limit harm (for example, reflex, agility, possibility of escape);		Pass
	e) practical experience and knowledge, for example, - of the machinery, - of similar machinery, - no experience.		Pass
5.5.3	Aspects to be considered during risk estimation		—
5.5.3.1	Persons exposed		—
	Risk estimation shall take into account all persons (operators and others) for whom exposure to the hazard is reasonably foreseeable.	According to the strategy.	Pass
5.5.3.2	Type, frequency and duration of exposure		—
	The estimation of the exposure to the hazard under consideration (including long-term damage to health) requires analysis of, and shall account for, all modes of operation of the machinery and methods of	According to the strategy.	Pass

	working. In particular, the analysis shall account for the needs for access during loading/unloading, setting, teaching,process changeover or correction, cleaning, fault-finding and maintenance.		
	The risk estimation shall also take into account tasks, for which it is necessary to suspend protective measures.		Pass
5.5.3.3	Relationship between exposure and effects		—
	The relationship between an exposure to a hazard and its effects shall be taken into account for each hazardous situation considered. The effects of accumulated exposure and combinations of hazards shall also be considered. When considering these effects, risk estimation shall, as far as practicable, be based on appropriate recognized data.	According to the strategy.	Pass
5.5.3.4	Human factors		—
	Human factors can affect risk and shall be taken into account in the risk estimation, including, for example, a) the interaction of person(s) with the machinery, including correction of malfunction,		Pass
	b) interaction between persons,		Pass
	c) stress-related aspects,		Pass
	d) ergonomic aspects,		Pass
	e) the capacity of persons to be aware of risks in a given situation depending on their training, experience and ability,		Pass
	f) fatigue aspects, and		Pass
	g) aspects of limited abilities (due to disability, age, etc.).		Pass
	Training, experience and ability can affect risk;	According to the strategy	Pass

	nevertheless, none of these factors shall be used as a substitute for hazard elimination, risk reduction by inherently safe design measure or safeguarding, wherever these protective measures can be practicably implemented.		
5.5.3.5	Suitability of protective measures		—
	Risk estimation shall take into account the suitability of protective measures and shall		Pass
	a) identify the circumstances which can result in harm,		Pass
	b) whenever appropriate, be carried out using quantitative methods to compare alternative protective measures (see ISO/TR 14121-2), and		N/A
	c) provide information that can assist with the selection of appropriate protective measures.		Pass
	When estimating risk, those components and systems identified as immediately increasing the risk in case of failure need special attention.		Pass
	When protective measures include work organization, correct behaviour, attention, application of personal protective equipment (PPE), skill or training, the relatively low reliability of such measures compared with proven technical protective measures shall be taken into account in the risk estimation.		Pass
5.5.3.6	Possibility of defeating or circumventing protective measures		—
	For the continued safe operation of a machine, it is important that the protective measures allow its easy use and do not hinder its intended use. Otherwise, there is a possibility that protective measures might be bypassed in order for maximum utility of the machine to be achieved.	According to the strategy.	Pass
	Risk estimation shall take account of the possibility of defeating or circumventing protective measures. It shall also take account of the incentive to defeat or circumvent protective measures when, for example,		Pass

	a) the protective measure slows down production or interferes with another activity or preference of the user,		Pass
	b) the protective measure is difficult to use,		Pass
	c) persons other than the operator are involved, or		Pass
	d) the protective measure is not recognized by the user or not accepted as being suitable for its function.		Pass
	Whether or not a protective measure can be defeated depends on both the type of protective measure, such as an adjustable guard or programmable trip device, and its design details.	According to the strategy.	Pass
	Protective measures that use programmable electronic	According to the strategy and	Pass
	systems introduce additional possibilities of defeat or circumvention if access to safety-related software is not appropriately restricted by design and monitoring methods. Risk estimation shall identify where safety-related functions are not separated from other machine functions and shall determine the extent to which access is possible. This is particularly important when remote access for diagnostic or process correction purposes is required.		Pass
5.5.3.7	Ability to maintain protective measures		—
	Risk estimation shall consider whether the protective measures can be maintained in the condition necessary to provide the required level of protection.		Pass
5.5.3.8	Information for use		—
	Risk estimation shall take into account the information for use, as available. See also 6.4.		Pass
5.6	Risk evaluation		—
5.6.1	General		—

	After risk estimation has been completed, risk evaluation shall be carried out to determine if risk reduction is required. If risk reduction is required, then appropriate protective measures shall be selected and applied (see Clause 6). As shown in Figure 1, the adequacy of the risk reduction shall be determined after applying each of the three steps of risk reduction described in Clause 6. As part of this iterative process, the designer shall also check whether additional hazards are introduced or other risks increased when new protective measures are applied. If additional hazards do occur, they shall be added to the list of identified hazards and appropriate protective measures will be required to address them.		Pass
	Achieving the objectives of risk reduction and a favourable outcome of risk comparison applied when practicable gives confidence that risk has been adequately reduced.		Pass
5.6.2	Adequate risk reduction		—
	Application of the three-step method described in 6.1 is essential in achieving adequate risk reduction. Following the application of the three-step method, adequate risk reduction is achieved when		Pass
	- all operating conditions and all intervention procedures		Pass
	have been considered,		Pass
	- the hazards have been eliminated or risks reduced to the lowest practicable level,		Pass
	- any new hazards introduced by the protective measures have been properly addressed,		Pass
	- users are sufficiently informed and warned about the residual risks (see 6.1, step 3),		Pass
	- protective measures are compatible with one another,		Pass
	- sufficient consideration has been given to the consequences that can arise from the use in a nonprofessional/ non-industrial context of a machine designed for professional/industrial use, and		Pass

	- the protective measures do not adversely affect the operator's working conditions or the usability of the machine.		Pass
5.6.3	Comparison of risks		—
	As part of the process of risk evaluation, the risks associated with the machinery or parts of machinery can be compared with those of similar machinery or parts of machinery, provided the following criteria apply: - the similar machinery is in accordance with the relevant type-C standard(s);		N/A
	- the intended use, reasonably foreseeable misuse and the way both machines are designed and constructed are comparable;		N/A
	- the hazards and the elements of risk are comparable;		N/A
	- the technical specifications are comparable;		N/A
	- the conditions for use are comparable.		N/A
	The use of this comparison method does not eliminate the need to follow the risk assessment process as described in this International Standard for the specific conditions of use. For example, when a band saw used for cutting meat is compared with a band saw used for cutting wood, the risks associated with the different material shall be assessed.		N/A
6	Risk reduction		
6.1	General		
	The objective of risk reduction can be achieved by the elimination of hazards, or by separately or simultaneously reducing each of the two elements that determine the associated risk: _ severity of harm from the hazard under consideration; _ probability of occurrence of that harm. All protective measures intended for reaching this objective shall be applied in the following sequence, referred to as the three-step method (see also Figures 1 and 2).	This requirement is complied with.	Pass
6.2	Inherently safe design measures		
6.2.1	General		

	Inherently safe design measures are the first and most important step in the risk reduction process because protective measures inherent to the characteristics of the machine are likely to remain effective, whereas experience has shown that even well-designed safeguarding may fail or be violated and information for use may not be followed.	Appropriate machine design has been performed by the manufacturer.	Pass
	Inherently safe design measures are achieved by avoiding hazards or reducing risks by a suitable choice of design features of the machine itself and/or interaction between the exposed persons and the machine. NOTE See 6.3 for safeguarding and complementary measures that can be used to achieve the risk reduction objectives in the case where inherently safe design measures are not sufficient (see 6.1 for the three-step method).	Appropriate machine design has been performed by the manufacturer.	Pass
6.2.2	Consideration of geometrical factors and physical aspects		
6.2.2.1	Geometrical factors		Pass
	Such factors include the following.		
	a) The form of machinery is designed to maximize direct visibility of the working areas and hazard zones from the control position — reducing blind spots, for example — and choosing and locating means of indirect vision where necessary (mirrors, etc.) so as to take into account the characteristics of human vision, particularly when safe operation requires permanent direct control by the operator, for example: _ the travelling and working area of mobile machines; _ the zone of movement of lifted loads or of the carrier of machinery for lifting persons; _ the area of contact of the tool of a hand-held or hand-guided machine with the material being worked. The design of the machine shall be such that,	Appropriate machine design has been performed by the manufacturer.	Pass

	from the main control position, the operator is able to ensure that there are no exposed persons in the danger zones.		
	b) The form and the relative location of the mechanical components parts: for instance, crushing and shearing hazards are avoided by increasing the minimum gap between the moving parts, such that the part of the body under consideration can enter the gap safely, or by reducing the gap so that no part of the body can enter it (see ISO 13854 and ISO 13857).	Appropriate machine design has been performed by the manufacturer.	Pass
	c) Avoiding sharp edges and corners, protruding parts: in so far as their purpose allows, accessible parts of the machinery shall have no sharp edges, no sharp angles, no rough surfaces, no protruding parts likely to cause injury, and no openings which can “trap” parts of the body or clothing. In particular, sheet metal edges shall be deburred, flanged or trimmed, and open ends of tubes which can cause a “trap” shall be capped.	Appropriate machine design has been performed by the manufacturer.	Pass
	d) The form of the machine is designed so as to achieve a suitable working position and provide accessible manual controls (actuators).	Appropriate machine design has been performed by the manufacturer.	Pass
6.2.2.2	Physical aspects		-
	Such aspects include the following:		-
	a) limiting the actuating force to a sufficiently low value so that the actuated part does not generate a mechanical hazard;	The actuating force has been limited to be a sufficiently low value so that the actuated part does not generate a mechanical hazard.	Pass
	b) limiting the mass and/or velocity of the movable elements, and hence their kinetic energy;	The mass and/or velocity of the movable elements, and hence their kinetic energy have been limited.	Pass
	c) limiting the emissions by acting on the	The emissions by	Pass

	characteristics of the source using measures for reducing 1) noise emission at source (see ISO/TR 11688-1), 2) the emission of vibration at source, such as redistribution or addition of mass and changes of process parameters [for example, frequency and/or amplitude of movements (for hand-held and hand-guided machinery, see CR 1030-1)], 3) the emission of hazardous substances, including the use of less hazardous substances or dust-reducing processes (granules instead of powders, milling instead of grinding), and 4) radiation emissions, including, for example, avoiding the use of hazardous radiation sources, limiting the power of radiation to the lowest level sufficient for the proper functioning of the machine, designing the source so that the beam is concentrated on the target, increasing the distance between the source and the operator or providing for remote operation of the machinery [measures for reducing emission of non-ionizing radiation are given in 6.3.4.5 (see also EN 12198-1 and EN 12198-3)]	acting on the characteristics of the source have been limited.	
6.2.3	Taking into account general technical knowledge of machine design		
	This general technical knowledge can be derived from technical specifications for design (standards, design codes, calculation rules, etc.), which should be used to cover		
	a) mechanical stresses such as		
	- stress limitation by implementation of correct calculation, construction and fastening methods as regards, for example, bolted assemblies and welded assemblies,	The appropriate technical knowledge of mechanical has been taken into account.	Pass
	- stress limitation by overload prevention (bursting disk, pressure-limiting valves, breakage points, torque-limiting devices, etc.),	The appropriate technical knowledge of mechanical has been taken into	Pass

		account.	
	- avoiding fatigue in elements under variable stresses (notably cyclic stresses),	The appropriate technical knowledge of mechanical has been taken into account.	Pass
	- static and dynamic balancing of rotating elements,	The appropriate technical knowledge of mechanical has been taken into account.	Pass
	b) materials and their properties such as		
	- resistance to corrosion, ageing, abrasion and wear,	The materials have been treated by appropriate methods.	Pass
	- hardness, ductility, brittleness,	The materials have been treated by appropriate methods.	Pass
	- homogeneity,	The materials have been treated by appropriate methods.	Pass
	- toxicity,	The materials have been treated by appropriate methods.	Pass
	- flammability	The materials have been treated by appropriate methods.	Pass
	c) emission values for		
	- noise,	No noise will result in hazard in this machine.	Pass
	- vibration,	No vibration will result in hazard in this machine.	Pass
	- hazardous substances,	No hazardous substances will result in hazard in this machine.	Pass

	- radiation	No radiation will result in hazard in this machine.	Pass
	When the reliability of particular components or assemblies is critical for safety (for example, ropes, chains, lifting accessories for lifting loads or persons), stress limits shall be multiplied by appropriate working coefficients.	Appropriate working coefficients have been taken into account during design and calculation.	Pass
6.2.4	Choice of appropriate technology		
	One or more hazards can be eliminated or risks reduced by the choice of the technology to be used in certain applications such as the following:		
	a) on machines intended for use in explosive atmospheres, using - appropriately selected pneumatic or hydraulic control system and machine actuators, - intrinsically safe electrical equipment (see IEC 60079-11);	Not applicable.	N/A
	b) for particular products to be processed (for example, by a solvent), by using equipment that ensures the temperature will remain far below the flash point;	Not applicable.	N/A
	c) the use of alternative equipment to avoid high noise levels, such as - electrical instead of pneumatic equipment, - in certain conditions, water-cutting instead of mechanical equipment.	The appropriate technology has been chosen.	Pass
6.2.5	Applying principle of positive mechanical action		
	Positive mechanical action is achieved when a moving mechanical component inevitably moves another component along with it, either by direct contact or via rigid elements. An example of this is positive opening operation of switching devices in an electrical circuit (see IEC 60947-5-1 and ISO 14119).	The principle of the positive mechanical action of a component on another component has been applied.	Pass
6.2.6	Provisions for stability		
	Machines shall be designed so that they have	These machines have	Pass

	sufficient stability to allow them to be used safely in their specified conditions of use.	been designed to have sufficient stability to allow them to be used safely in their specified conditions of use.	
	Factors to be taken into account include		
	- the geometry of the base,	The factor has been taken into account during design.	Pass
	- the weight distribution, including loading,	The factor has been taken into account during design.	Pass
	- the dynamic forces due to movements of parts of the machine, of the machine itself or of elements held by the machine which can result in an overturning moment,	The factor has been taken into account during design.	Pass
	- vibration	The factor has been taken into account during design.	Pass
	- oscillations of the centre of gravity,	Not applicable.	N/A
	- characteristics of the supporting surface in case of travelling or installation on different sites (ground conditions, slope, etc.),	The factor has been taken into account during design.	Pass
	- external forces, such as wind pressure and manual forces.	The factor has been taken into account during design.	Pass
	Stability shall be considered in all phases of the life cycle of the machine, including handling, travelling, installation, use, dismantling, disabling and scrapping.	The factor has been taken into account during design.	Pass
	Other protective measures for stability relevant to safeguarding are given in 6.3.2.6.	Please see the related clause.	Pass
6.2.7	Provisions for maintainability		
	When designing a machine, the following maintainability factors shall be taken into account to enable maintenance of the machine:		
	- accessibility, taking into account the environment and the human body	The factor has been taken into account	Pass

	measurements, including the dimensions of the working clothes and tools used;	during design.	
	- ease of handling, taking into account human capabilities;	The factor has been taken into account during design.	Pass
	- limitation of the number of special tools and equipment.	The factor has been taken into account during design.	Pass
6.2.8	Observing ergonomic principles		
	Ergonomic principles shall be taken into account in designing machinery so as to reduce the mental or physical stress of, and strain on, the operator.	Appropriate ergonomic principles have been taken into account in designing machinery to reduce mental or physical stress and strain of the operator.	Pass
	These principles shall be considered when allocating functions to operator and machine (degree of automation) in the basic design.	These principles have been taken into account during allocating functions to operator and machine.	Pass
	Account shall be taken of body sizes likely to be found in the intended user population, strengths and postures, movement amplitudes, frequency of cyclic actions (see ISO 10075 and ISO 10075-2).	All these factors have been taken into account during design.	Pass
	All elements of the operator–machine interface, such as controls, signalling or data display elements, shall be designed to be easily understood so that clear and unambiguous interaction between the operator and the machine is possible. See EN 614-1, EN 13861 and IEC 61310-1.	All arrangement and design of manual controls have been checked in compliance with.	Pass
	The designer's attention is particularly drawn to following ergonomic aspects of machine design.		-
	a) Avoid the necessity for stressful postures and movements during the use of the machine (for example, providing facilities to adjust the	Stressful postures and movements during use of the	Pass

	machine to suit the various operators).	machine have been avoided.	
	b) Design machines, especially hand-held and mobile machines, so as to enable them to be operated easily, taking into account human effort, actuation of controls and hand, arm and leg anatomy.	This machine has been adjusted to the human strength and convenient movement.	Pass
	c) Limit as far as possible noise, vibration and thermal effects such as extreme temperatures.	This machine has been designed with low noise, vibration.	Pass
	d) Avoid linking the operator's working rhythm to an automatic succession of cycles.		Pass
	e) Provide local lighting on or in the machine for the illumination of the working area and of adjusting, setting-up and frequent maintenance zones when the design features of the machine and/or its guards render the ambient lighting inadequate. Flicker, dazzling, shadows and stroboscopic effects shall be avoided if they can cause a risk. If the position or the lighting source has to be adjusted, its location shall be such that it does not cause any risk to persons making the adjustment.	All these factors have been taken into account during design.	Pass
	f) Select, locate and identify manual controls (actuators) so that		-
	- they are clearly visible and identifiable, and appropriately marked where necessary (see 6.4.4),	All design and arrangement of the control logic have been checked in compliance with this requirement.	Pass
	- they can be safely operated without hesitation or loss of time and without ambiguity (for example, a standard layout of controls reduces the possibility of error when an operator changes from a machine to another one of similar type having the same pattern of operation),	All design and arrangement of the control logic have been checked in compliance with this requirement.	Pass
	- their location (for push-buttons) and their	All the function has	Pass

	movement (for levers and hand wheels) are consistent with their effect (see IEC 61310-3),	been checked in compliance with this requirement.	
	- their operation cannot cause additional risk.		Pass
	Where a control is designed and constructed to perform several different actions — namely, where there is no one-to-one correspondence (for example, keyboards) — the action to be performed shall be clearly displayed and subject to confirmation where necessary.		N/A
	Controls shall be so arranged that their layout, travel and resistance to operation are compatible with the action to be performed, taking account of ergonomic principles. Constraints due to the necessary or foreseeable use of personal protective equipment (such as footwear, gloves) shall be taken into account.	All the arrangement of the control logic have been checked in compliance with this requirement.	Pass
	g) Select, design and locate indicators, dials and visual display units so that		
	- they fit within the parameters and characteristics of human perception,		Pass
	- information displayed can be detected, identified and interpreted conveniently, i.e. long-lasting, distinct, unambiguous and understandable with respect to the operator's requirements and the intended use,		Pass
	- the operator is able to perceive them from the control position.		Pass
6.2.9	Electrical hazards		
	For the design of the electrical equipment of machines, IEC 60204-1 gives general provisions about disconnection and switching of electrical circuits and for protection against electric shock.	Please also make reference to EN 60204-1 test report.	Pass
	For requirements related to specific machines, see corresponding IEC standards (for example, IEC 61029, IEC 60745 or IEC 60335).		N/A
6.2.10	Pneumatic and hydraulic hazards		-

	Pneumatic and hydraulic equipment of machinery shall be designed so that		
	- the maximum rated pressure cannot be exceeded in the circuits (using, for example, pressure-limiting devices),	This requirement is complied with.	Pass
	- no hazard results from pressure fluctuations or increases, or from loss of pressure or vacuum,	This requirement is complied with.	Pass
	- no hazardous fluid jet or sudden hazardous movement of the hose (whiplash) results from leakage or component failures,	This requirement is complied with.	Pass
	- air receivers, air reservoirs or similar vessels (such as in gas-loaded accumulators) comply with the applicable design standard codes or regulations for these elements,	This requirement is complied with.	Pass
	- all elements of the equipment, especially pipes and hoses, are protected against harmful external effects,	This requirement is complied with.	Pass
	- as far as possible, reservoirs and similar vessels (for example, gas-loaded accumulators) are automatically depressurized when isolating the machine from its power supply (see 6.3.5.4) and, if not possible, means are provided for their isolation, local depressurizing and pressure indication (see also ISO 14118:2000, Clause 5),	This requirement is complied with.	Pass
	- all elements which remain under pressure after isolation of the machine from its power supply are provided with clearly identified exhaust devices, and there is a warning label drawing attention to the necessity of depressurizing those elements before any setting or maintenance activity on the machine.	This requirement is complied with.	Pass
6.2.11	Applying inherently safe design measures to control systems		-
6.2.11.1	General		-
	The design measures of the control system shall be chosen so that their safety-related performance provides a sufficient amount of risk reduction (see ISO 13849-1 or IEC 62061).	Inherently safe design measures to control system have applied.	Pass

	The correct design of machine control systems can avoid unforeseen and potentially hazardous machine behaviour.		Pass
	Typical causes of hazardous machine behaviour are		
	- an unsuitable design or modification (accidental or deliberate) of the control system logic,	No this kind of hazard in this machine	Pass
	- a temporary or permanent defect or failure of one or several components of the control system,	No this kind of hazard in this machine	Pass
	- a variation or a failure in the power supply of the control system,	No this kind of hazard in this machine	Pass
	- inappropriate selection, design and location of the control devices.	No this kind of hazard in this machine	Pass
	Typical examples of hazardous machine behaviour are		
	- unexpected start-up (see ISO 14118),	No this kind of hazard in this machine	Pass
	- uncontrolled speed change,	No this kind of hazard in this machine	Pass
	- failure to stop moving parts,	No this kind of hazard in this machine	Pass
	- dropping or ejection of part of the machine or of a workpiece clamped by the machine,	No this kind of hazard in this machine	Pass
	- machine action resulting from inhibition (defeating or failure) of protective devices.	No this kind of hazard in this machine	Pass
	In order to prevent hazardous machine behaviour and to achieve safety functions, the design of control systems shall comply with	The design of control systems comply with the related principles	Pass

	the principles and methods presented in this subclause (6.2.11) and in 6.2.12. These principles and methods shall be applied singly or in combination as appropriate to the circumstances (see ISO 13849-1, IEC 60204-1 and IEC 62061).	and methods	
	Control systems shall be designed to enable the operator to interact with the machine safely and easily. This requires one or several of the following solutions:		
	- systematic analysis of start and stop conditions;	Systematic analysis have been applied.	Pass
	- provision for specific operating modes (for example, start-up after normal stop, restart after cycle interruption or after emergency stop, removal of the workpieces contained in the machine, operation of a part of the machine in case of a failure of a machine element);	Enough provisions have been provided.	Pass
	- clear display of the faults;		Pass
	- measures to prevent accidental generation of unexpected start commands (for example, shrouded start device) likely to cause dangerous machine behaviour (see ISO 14118:2000, Figure 1);	Main switch with lock and related devices are provided.	Pass
	- maintained stop commands (for example, interlock) to prevent restarting that could result in dangerous machine behaviour (see ISO 14118:2000, Figure 1).	This requirement is complied with.	Pass
	An assembly of machines may be divided into several zones for emergency stopping, for stopping as a result of protective devices and/or for isolation and energy dissipation. The different zones shall be clearly defined and it shall be obvious which parts of the machine belong to which zone. Likewise, it shall be obvious which control devices (for example, emergency stop devices, supply disconnecting devices) and/or protective devices belong to which zone. The interfaces between zones shall be designed such that no function in one zone creates hazards in		N/A

	another zone which has been stopped for an intervention.		
	Control systems shall be designed to limit the movements of parts of the machinery, the machine itself, or work pieces and/or loads held by the machinery, to the safe design parameters (for example, range, speed, acceleration, deceleration, load capacity). Allowance shall be made for dynamic effects (swinging of loads, etc.).	This requirement is complied with.	Pass
6.2.11.2	Starting of an internal power source/switching on an external power supply		
	The starting of an internal power source or switching-on of an external power supply shall not result in a hazardous situation.	Please also make reference to EN 60204-1 test report.	Pass
6.2.11.3	Starting/stopping of a mechanism		
	The primary action for starting or accelerating the movement of a mechanism should be performed by the application or an increase of voltage or fluid pressure, or — if binary logic elements are considered — by passage from state 0 to state 1 (where state 1 represents the highest energy state).	This requirement has been taken into account during design.	Pass
	The primary action for stopping or slowing down should be performed by removal or reduction of voltage or fluid pressure, or — if binary logic elements are considered — by passage from state 1 to state 0 (where state 1 represents the highest energy state)		Pass
	In certain applications, such as high-voltage switchgear, this principle cannot be followed, in which case other measures should be applied to achieve the same level of confidence for the stopping or slowing down.		N/A
	When, in order for the operator to maintain permanent control of deceleration, this principle is not observed (for example, a hydraulic braking device of a self-propelled mobile machine), the machine shall be equipped with a means of slowing and stopping in case of failure of the main braking		Pass

	system.		
6.2.11.4	Restart after power interruption		
	If a hazard could be generated, the spontaneous restart of a machine when it is re-energized after power interruption shall be prevented (for example, by use of a self-maintained relay, contactor or valve).		Pass
6.2.11.5	Interruption of power supply		
	Machinery shall be designed to prevent hazardous situations resulting from interruption or excessive fluctuation of the power supply. At least the following requirements shall be met:	The hazardous situations resulting from interruption or excessive fluctuation of the power supply has been prevented.	Pass
	- the stopping function of the machinery shall remain;		Pass
	- all devices whose permanent operation is required for safety shall operate in an effective way to maintain safety (for example, locking, clamping devices, cooling or heating devices, power-assisted steering of self-propelled mobile machinery);		Pass
	- parts of machinery or workpieces and/or loads held by machinery which are liable to move as a result of potential energy shall be retained for the time necessary to allow them to be safely lowered.		Pass
6.2.11.6	Use of automatic monitoring		
	Automatic monitoring is intended to ensure that a safety function or functions implemented by a protective measure do not fail to be performed if the ability of a component or an element to perform its function is diminished, or if the process conditions are changed such that hazards are generated.	Appropriate automatic monitoring has been used.	Pass
	Automatic monitoring either detects a fault immediately or carries out periodic checks so that a fault is detected before the next demand upon the safety function. In either case, the	Appropriate automatic monitoring has been used.	Pass

	protective measure can be initiated immediately or delayed until a specific event occurs (for example, the beginning of the machine cycle).		
	The protective measure may be, for example,		-
	- the stopping of the hazardous process,		Pass
	- preventing the restart of this process after the first stop following the failure,		Pass
	- the triggering of an alarm.		Pass
6.2.11.7	Safety functions implemented by programmable electronic control systems		-
6.2.11.7.1	General		-
	A control system that includes programmable electronic equipment (for example, programmable controllers) can, where appropriate, be used to implement safety functions at machinery. Where a programmable electronic control system is used, it is necessary to consider its performance requirements in relation to the requirements for the safety functions. The design of the programmable electronic control system shall be such that the probability of random hardware failures and the likelihood of systematic failures that can adversely affect the performance of the safety-related control function(s) is sufficiently low. Where a programmable electronic control system performs a monitoring function, the system behaviour on detection of a fault shall be considered (see also the IEC 61508 series for further guidance).		N/A
	The programmable electronic control system should be installed and validated to ensure that the specified performance [for example, safety integrity level (SIL) in IEC 61508] for each safety function has been achieved. Validation comprises testing and analysis (for example, static, dynamic or failure analysis) to show that all parts interact correctly to perform the safety function and that unintended functions do not occur.		N/A

6.2.11.7.2	Hardware aspects		
	The hardware (including, for example, sensors, actuators and logic solvers) shall be selected, and/or designed and installed, to meet both the functional and performance requirements of the safety function(s) to be performed, in particular, by means of - architectural constraints (the configuration of the system, its ability to tolerate faults, its behaviour on detection of a fault, etc.), - selection, and/or design, of equipment and devices with an appropriate probability of dangerous random hardware failure, and - the incorporation of measures and techniques within the hardware so as to avoid systematic failures and control systematic faults.		N/A
6.2.11.7.3	Software aspects		
	The software, including internal operating software (or system software) and application software, shall be designed so as to satisfy the performance specification for the safety functions (see also IEC 61508-3). Application software should not be reprogrammable by the user. This may be achieved by use of embedded software in a non-reprogrammable memory [for example, micro-controller, application-specific integrated circuit (ASIC)]. When the application requires reprogramming by the user, the access to the software dealing with safety functions should be restricted (for example, by locks or passwords for the authorized persons).		N/A
6.2.11.8	Principles relating to manual control		
	a) Manual control devices shall be designed and located according to the relevant ergonomic principles given in 6.2.8, item f).	This requirement has been taken into account during design.	Pass
	b) A stop control device shall be placed near	A stop control device	Pass

	each start control device. Where the start/stop function is performed by means of a hold-to-run control, a separate stop control device shall be provided when a risk can result from the hold-to-run control device failing to deliver a stop command when released.	has been placed near each start control device.	
	c) Manual controls shall be located out of reach of the danger zones (see IEC 61310-3), except for certain controls where, of necessity, they are located within a danger zone, such as emergency stop or teach pendant.	Manual controls have been located out of reach of the danger zones.	Pass
	d) Whenever possible, control devices and control positions shall be located so that the operator is able to observe the working area or hazard zone.		Pass
	e) If it is possible to start the same hazardous element by means of several controls, the control circuit shall be so arranged that only one control is effective at a given time. This applies especially to machines which can be manually controlled by means of, among others, a portable control unit (such as a teach pendant), with which the operator can enter danger zones.	Not applicable.	N/A
	f) Control actuators shall be designed or guarded so that their effect, where a risk is involved, cannot occur without intentional operation (see ISO 9355-1, ISO 9355-3 and ISO 447).		Pass
	g) For machine functions whose safe operation depends on permanent, direct control by the operator, measures shall be implemented to ensure the presence of the operator at the control position (for example, by the design and location of control devices).		Pass
	h) For cableless control, an automatic stop shall be performed when correct control signals are not received, including loss of communication (see IEC 60204-1).	Not applicable.	N/A
6.2.11.9	Control mode for setting, teaching, process changeover, fault-finding, cleaning or		

	maintenance		
	Where, for setting, teaching, process changeover, fault-finding, cleaning or maintenance of machinery, a guard has to be displaced or removed and/or a protective device has to be disabled, and where it is necessary for the purpose of these operations for the machinery or part of the machinery to be put into operation, the safety of the operator shall be achieved using a specific control mode which simultaneously	Not applicable.	N/A
	a) disables all other control modes,	Not applicable.	N/A
	b) permits operation of the hazardous elements only by continuous actuation of an enabling device, a two-hand control device or a hold-to-run control device,	Not applicable.	N/A
	c) permits operation of the hazardous elements only in reduced risk conditions (for example, reduced speed, reduced power/force, step-by-step, for example, with a limited movement control device),	Not applicable.	N/A
	d) prevents any operation of hazardous functions by voluntary or involuntary action on the machine's sensors.	Not applicable.	N/A
6.2.11.10	Selection of control and operating modes		
	If machinery has been designed and built to allow for its use in several control or operating modes requiring different protective measures and/or work procedures (for example, to allow for adjustment, setting, maintenance, inspection), it shall be fitted with a mode selector which can be locked in each position. Each position of the selector shall be clearly identifiable and shall exclusively allow one control or operating mode.	This requirement is complied with.	Pass
	The selector may be replaced by another selection means which restricts the use of certain functions of the machinery to certain categories of operators (for example, access codes for certain numerically controlled	This requirement is complied with.	Pass

	functions).		
6.2.11.11	Applying measures to achieve electromagnetic compatibility (EMC)		
	For guidance on electromagnetic compatibility, see IEC 60204-1 and IEC 61000-6.	C	N/A
6.2.11.12	Provision of diagnostic systems to aid fault-finding		
	Diagnostic systems to aid fault-finding should be included in the control system so that there is no need to disable any protective measure.		Pass
6.2.12	Minimizing probability of failure of safety functions		
6.2.12.1	General		
	Safety of machinery is not only dependent on the reliability of the control systems but also on the reliability of all parts of the machine. The continued operation of the safety functions is essential for the safe use of the machine. This can be achieved by the measures given in 6.2.12.2 to 6.2.12.4.		Pass
6.2.12.2	Use of reliable components		
	Reliable components" means components which are capable of withstanding all disturbances and stresses associated with the usage of the equipment in the conditions of intended use (including the environmental conditions), for the period of time or the number of operations fixed for the use, with a low probability of failures generating a hazardous malfunctioning of the machine. Components shall be selected taking into account all factors mentioned above (see also 6.2.13).	Reliable components have been used.	Pass
6.2.12.3	Use of "oriented failure mode" components		
	"Oriented failure mode" components or systems are those in which the predominant failure mode is known in advance and which can be used so that the effect of such a failure		N/A

	on the machine function can be predicted.		
6.2.12.4	Duplication (or redundancy) of components or subsystems		
	In the design of safety-related parts of the machine, duplication (or redundancy) of components may be used so that, if one component fails, another component or components continue to perform the respective function(s), thereby ensuring that the safety function remains available.	Not applicable.	N/A
	In order to allow the proper action to be initiated, component failure shall be detected by automatic monitoring (see 6.2.11.6) or in some circumstances by regular inspection, provided that the inspection interval is shorter than the expected lifetime of the components.	Not applicable.	N/A
	Diversity of design and/or technology can be used to avoid common cause failures (for example, from electromagnetic disturbance) or common mode failures.	Not applicable.	N/A
6.2.13	Limiting exposure to hazards through reliability of equipment		
	Increased reliability of all component parts of machinery reduces the frequency of incidents requiring intervention, thereby reducing exposure to hazards.	This requirement is complied with.	Pass
	This applies to power systems (operative part, see Annex A) as well as to control systems, and to safety functions as well as to other functions of machinery.	This requirement is complied with.	Pass
	Safety-related components (for example, certain sensors) of known reliability shall be used.	This requirement is complied with.	Pass
	The elements of guards and of protective devices shall be especially reliable, as their failure can expose persons to hazards, and also because poor reliability would encourage attempts to defeat them.	This requirement is complied with.	Pass
6.2.14	Limiting exposure to hazards through mechanization or automation of loading (feeding)/ unloading (removal) operations		

	Mechanization and automation of machine loading/unloading operations and, more generally, of handling operations — of workpieces, materials or substances — limits the risk generated by these operations by reducing the exposure of persons to hazards at the operating points.	This requirement is complied with.	Pass
	Automation can be achieved by, for example, robots, handling devices, transfer mechanisms and air-blast equipment. Mechanization can be achieved by, for example, feeding slides, push-rods and hand-operated indexing tables.	This requirement has been complied with by design.	Pass
	While automatic feeding and removal devices have much to offer in preventing accidents to machine operators, they can create danger when any faults are being corrected. Care shall be taken to ensure that the use of these devices does not introduce further hazards, such as trapping or crushing, between the devices and parts of the machine or workpieces/materials being processed. Suitable safeguards (see 6.3) shall be provided if this cannot be ensured.	This requirement has been complied with by design.	Pass
	Automatic feeding and removal devices with their own control systems and the control system of the associated machine shall be interconnected after thorough study of how all safety functions are performed in all the control and operation modes of the entire equipment.	This requirement has been complied with by design.	Pass
6.2.15	Limiting exposure to hazards through location of setting and maintenance points outside danger zones		
	The need for access to danger zones shall be minimized by locating maintenance, lubrication and setting points outside these zones.		Pass
6.3	Safeguarding and complementary protective measures		
6.3.1	General		
	Guards and protective devices shall be used to protect persons whenever an inherently safe		Pass

	design measure does not reasonably make it possible either to remove hazards or to sufficiently reduce risks. Complementary protective measures involving additional equipment (for example, emergency stop equipment) may have to be implemented. NOTE The different kinds of guards and protective devices are defined in 3.27 and 3.28.		
6.3.2	Selection and implementation of guards and protective devices		
6.3.2.1	General		
	This subclause gives guidelines for the selection and the implementation of guards and protective devices the primary purpose of which is to protect persons against hazards generated by moving parts, according to the nature of those parts (see Figure 4) and to the need for access to the danger zone(s).		Pass
	The exact choice of a safeguard for a particular machine shall be made on the basis of the risk assessment for that machine.		Pass
	In selecting an appropriate safeguard for a particular type of machinery or hazard zone, it shall be borne in mind that a fixed guard is simple and shall be used where the access of an operator into a danger zone is not required during the normal operation (operation without malfunction) of the machinery.		Pass
	As the need for frequency of access increases, this inevitably leads to the fixed guard not being replaced. This requires the use of an alternative protective measure (movable interlocking guard, sensitive protective equipment).	Movable interlocking guard is used.	Pass
	A combination of safeguards can sometimes be required. For example, where, in conjunction with a fixed guard, a mechanical loading (feeding) device is used to feed a workpiece into a machine, thereby removing the need for access to the primary hazard zone, a trip device can be required to protect		N/A

	against the secondary drawing-in or shearing hazard between the mechanical loading (feeding) device, when reachable, and the fixed guard.		
	Consideration shall be given to the enclosure of control positions or intervention zones to provide combined protection against several hazards including	This requirement has been taken in to consideration.	Pass
	a) hazards from falling or ejected objects, using, for example, protection in the form of a falling object protection structure (FOPS),	No such hazards exist in this machine.	Pass
	b) emission hazards (protection against noise, vibration, radiation, substances hazardous to health, etc.),	No such hazards exist in this machine.	Pass
	c) hazards due to the environment (protection against heat, cold, foul weather, etc.),	No such hazards exist in this machine.	Pass
	d) hazards due to tipping over or rolling over of machinery, using, for example, protection in the form of roll-over or tip-over protection structures (ROPS and TOPS).	No such hazards exist in this machine.	Pass
	The design of enclosed work stations, such as cabs and cabins, shall take into account ergonomic principles concerning visibility, lighting, atmospheric conditions, access, posture.	Ergonomic principles have been taken into account during design.	Pass
6.3.2.2	Where access to the hazard zone is not required during normal operation		
	Where access to the hazard zone is not required during normal operation of the machinery, safeguards should be selected from the following:		
	a) fixed guards (see also ISO 14120);	Fixed guards are provided.	Pass
	b) interlocking guards with or without guard locking (see also 6.3.3.2.3, ISO 14119 and ISO 14120);	Not applicable.	N/A
	c) self-closing guards (see ISO 14120:2002, 3.3.2);	Not applicable.	N/A
	d) sensitive protective equipment, such as electrosensitive protective equipment (see	Not applicable.	N/A

	IEC 61496) or pressure-sensitive protective devices (see ISO 13856).		
6.3.2.3	Where access to the hazard zone is required during normal operation		
	Where access to the hazard zone is required during normal operation of the machinery, safeguards should be selected from the following:		
	a) interlocking guards with or without guard locking (see also ISO 14119, ISO 14120 and 6.3.3.2.3 of this document); b) sensitive protective equipment, such as electrosensitive protective equipment (see IEC 61496); c) adjustable guards; d) self-closing guards (see ISO 14120:2002, 3.3.2); e) two-hand control devices (see ISO 13851); f) interlocking guards with a start function (control guard) (see 6.3.3.2.5).	Not applicable.	N/A
6.3.2.4	Where access to the hazard zone is required for machine setting, teaching, process changeover, fault-finding, cleaning or maintenance		
	As far as possible, machines shall be designed so that the safeguards provided for the protection of the production operator also ensure the protection of personnel carrying out setting, teaching, process changeover, fault-finding, cleaning or maintenance, without hindering them in the performance of their task. Such tasks shall be identified and considered in the risk assessment as parts of the use of the machine (see 5.2).	Not applicable.	N/A
6.3.2.5	Selection and implementation of sensitive protective equipment1)		
6.3.2.5.1	Selection		
	Due to the great diversity of the technologies on which their detection function is based, all types of sensitive protective equipment are far	Not applicable.	N/A

	from being equally suitable for safety applications. The following provisions are intended to provide the designer with criteria for selecting, for each application, the most suitable device(s).		
	Types of sensitive protective equipment include - light curtains, - scanning devices, for example, laser scanners, - pressure-sensitive mats, and - trip bars, trip wires.	Not applicable.	N/A
	Sensitive protective equipment can be used - for tripping purposes, - for presence sensing, - for both tripping and presence sensing, or - to re-initiate machine operation — a practice subject to stringent conditions.	Not applicable.	N/A
	The following characteristics of the machinery, among others, can preclude the sole use of sensitive protective equipment: - tendency for the machinery to eject materials or component parts; - necessity to guard against emissions (noise, radiation, dust, etc.); - erratic or excessive machine stopping time; - inability of a machine to stop part-way through a cycle.	Not applicable.	N/A
6.3.2.5.2	Implementation		
	Consideration should be given to a) the size, characteristics and positioning of the detection zone (see ISO 13855, which deals with the positioning of some types of sensitive protective equipment), b) the reaction of the device to fault conditions (see IEC 61496 for electrosensitive protective equipment), c) the possibility of circumvention, and d) detection capability and its variation over	Not applicable.	N/A

	the course of time (as a result, for example, of its susceptibility to different environmental conditions such as the presence of reflecting surfaces, other artificial light sources and sunlight or impurities in the air).		
	Sensitive protective equipment shall be integrated in the operative part and associated with the control system of the machine so that - a command is given as soon as a person or part of a person is detected, - the withdrawal of the person or part of a person detected does not, by itself, restart the hazardous machine function(s), and therefore the command given by the sensitive protective equipment is maintained by the control system until a new command is given, - restarting the hazardous machine function(s) results from the voluntary actuation by the operator of a control device placed outside the hazard zone, where this zone can be observed by the operator, - the machine cannot operate during interruption of the detection function of the sensitive protective equipment, except during muting phases, and - the position and the shape of the detection field prevents, possibly together with fixed guards, a person or part of a person from entering or being present in the hazard zone without being detected.	Not applicable.	N/A
6.3.2.5.3	Additional requirements for sensitive protective equipment when used for cycle initiation		
	In this exceptional application, the starting of the machine cycle is initiated by the withdrawal of a person or of the detected part of a person from the sensing field of the sensitive protective equipment, without any additional start command, hence deviating from the general requirement given in the second point of the dashed list in 6.3.2.5.2, above. After switching on the power supply, or when the machine has been stopped	Not applicable.	N/A

	by the tripping function of the sensitive protective equipment, the machine cycle shall be initiated only by voluntary actuation of a start control.		
	Cycle initiation by sensitive protective equipment shall be subject to the following conditions:	Not applicable.	N/A
	a) only active optoelectronic protective devices (AOPDs) complying with IEC 61496 series shall be used;	Not applicable.	N/A
	b) the requirements for an AOPD used as a tripping and presence-sensing device (see IEC 61496) are satisfied — in particular, location, minimum distance (see ISO 13855), detection capability, reliability and monitoring of control and braking systems;	Not applicable.	N/A
	c) the cycle time of the machine is short and the facility to re-initiate the machine upon clearing of the sensing field is limited to a period commensurate with a single normal cycle;	Not applicable.	N/A
	d) entering the sensing field of the AOPD(s) or opening interlocking guards is the only way to enter the hazard zone;	Not applicable.	N/A
	e) if there is more than one AOPD safeguarding the machine, only one of the AOPDs is capable of cycle re-initiation;	Not applicable.	N/A
	f) with regard to the higher risk resulting from automatic cycle initiation, the AOPD and the associated control system comply with a higher safety-related performance than under normal conditions.	Not applicable.	N/A
6.3.2.6	Protective measures for stability		
	If stability cannot be achieved by inherently safe design measures such as weight distribution (see 6.2.6), it shall be maintained by the use of protective measures such as		
	- anchorage bolts,		Pass
	- locking devices,		Pass
	- movement limiters or mechanical stops,		Pass
	- acceleration or deceleration limiters,		N/A

	- load limiters,		Pass
	- alarms warning of the approach to stability or tipping limits.		N/A
6.3.2.7	Other protective devices		
	When a machine requires continuous control by the operator (for example, mobile machines, cranes) and an error of the operator can generate a hazardous situation, this machine shall be equipped with the necessary devices to enable the operation to remain within specified limits, in particular	Not applicable.	N/A
	- when the operator has insufficient visibility of the hazard zone,	Not applicable.	N/A
	- when the operator lacks knowledge of the actual value of a safety-related parameter (distance, speed, mass, angle, etc.),	Not applicable.	N/A
	- when hazards can result from operations other than those controlled by the operator.	Not applicable.	N/A
	The necessary devices include		
	a) devices for limiting parameters of movement (distance, angle, velocity, acceleration), b) overloading and moment limiting devices, c) devices to prevent collisions or interference with other machines, d) devices for preventing hazards to pedestrian operators of mobile machinery or other pedestrians, e) torque limiting devices, and breakage points to prevent excessive stress of components and assemblies, f) devices for limiting pressure or temperature, g) devices for monitoring emissions, h) devices to prevent operation in the absence of the operator at the control position, i) devices to prevent lifting operations unless stabilizers are in place, j) devices to limit inclination of the machine on a slope, and k) devices to ensure that components are in a safe position before travelling.	Not applicable.	N/A

	Automatic protective measures triggered by such devices that take operation of the machinery out of the control of the operator (for example, automatic stop of hazardous movement) should be preceded or accompanied by a warning signal to enable the operator to take appropriate action (see 6.4.3).	Not applicable.	N/A
6.3.3	Requirements for design of guards and protective devices		
6.3.3.1	General requirements		
	Guards and protective devices shall be designed to be suitable for the intended use, taking into account mechanical and other hazards involved. Guards and protective devices shall be compatible with the working environment of the machine and designed so that they cannot be easily defeated. They shall provide the minimum possible interference with activities during operation and other phases of machine life, in order to reduce any incentive to defeat them.	Guards and protective devices have been appropriately designed.	Pass
	Guards and protective devices shall		
	a) be of robust construction,	This requirement has been taken into account during design.	Pass
	b) not give rise to any additional hazard,	This requirement has been taken into account during design.	Pass
	c) not be easy to bypass or render non-operational,	This requirement has been taken into account during design.	Pass
	d) be located at an adequate distance from the danger zone (see ISO 13855 and ISO 13857),	This requirement has been taken into account during design.	Pass
	e) cause minimum obstruction to the view of the production process,	This requirement has been taken into account during	Pass

		design.	
	f) enable essential work to be carried out for the installation and/or replacement of tools and for maintenance by allowing access only to the area where the work has to be carried out — if possible, without the guard having to be removed or protective device having to be disabled.	This requirement has been taken into account during design.	Pass
6.3.3.2	Requirements for guards		
6.3.3.2.1	Functions of guards		
	The functions that guards can achieve are		
	- prevention of access to the space enclosed by the guard, and/or - containment/capture of materials, workpieces, chips, liquids which can be ejected or dropped by the machine, and reduction of emissions (noise, radiation, hazardous substances such as dust, fumes, gases) that can be generated by the machine.	These functions are achieved by fixed guards	Pass
	Additionally, they could need to have particular properties relating to electricity, temperature, fire, explosion, vibration, visibility (see ISO 14120) and operator position ergonomics (for example, usability, operator's movements, postures, repetitive movements).	These functions are achieved by fixed guards	Pass
6.3.3.2.2	Requirements for fixed guards		
	Fixed guards shall be securely held in place either - permanently (for example by welding), or - by means of fasteners (screws, nuts) making removal/opening impossible without using tools; they should not remain closed without their fasteners (see ISO 14120).	All the fixed guards are securely held in place by appropriate fasteners.	Pass
6.3.3.2.3	Requirements for movable guards		
	Movable guards which provide protection against hazards generated by moving transmission parts shall a) as far as possible when open remain fixed	Not applicable.	N/A

	to the machinery or other structure (generally by means of hinges or guides), and b) be interlocking (with guard locking when necessary) (see ISO 14119). See Figure 4. Movable guards against hazards generated by non-transmission moving parts shall be designed and associated with the machine control system so that - moving parts cannot start up while they are within the operator's reach and the operator cannot reach moving parts once they have started up, with this able to be achieved by interlocking guards, with guard locking when necessary, - they can be adjusted only by an intentional action, such as the use of a tool or a key, and - the absence or failure of one of their components either prevents starting of the moving parts or stops them, with this able to be achieved by automatic monitoring (see 6.2.11.6).		
6.3.3.2.4	Requirements for adjustable guards		
	Adjustable guards may only be used where the hazard zone cannot for operational reasons be completely enclosed. Manually adjustable guards shall be - designed so that the adjustment remains fixed during a given operation, and - readily adjustable without the use of tools.	Not applicable.	N/A
6.3.3.2.5	Requirements for interlocking guards with a start function (control guards)		
	An interlocking guard with a start function may only be used provided that a) all requirements for interlocking guards are satisfied (see ISO 14119), b) the cycle time of the machine is short, c) the maximum opening time of the guard is preset to a low value (for example, equal to the cycle time) and, when this time is exceeded, the hazardous function(s) cannot be initiated by the closing of the interlocking	Not applicable.	N/A

	guard with a start function and resetting is necessary before restarting the machine, d) the dimensions or shape of the machine do not allow a person, or part of a person, to stay in the hazard zone or between the hazard zone and the guard while the guard is closed (see ISO 14120), e) all other guards, whether fixed (removable type) or movable, are interlocking guards, f) the interlocking device associated with the interlocking guard with a start function is designed such that — for example, by duplication of position detectors and use of automatic monitoring (see 6.2.11.6) — its failure cannot lead to an unintended/unexpected start-up, and g) the guard is securely held open (for example, by a spring or counterweight) such that it cannot initiate a start while falling by its own weight.		
6.3.3.2.6	Hazards from guards		
	Care shall be taken to prevent hazards which could be generated by - the guard construction (sharp edges or corners, material, noise emission, etc.), - the movements of the guards (shearing or crushing zones generated by power-operated guards and by heavy guards which are liable to fall).	No such hazards exist in this machine.	Pass
6.3.3.3	Technical characteristics of protective devices		
	Protective devices shall be selected or designed and connected to the control system such that correct implementation of their safety function(s) is ensured.	This requirement has been taken into account during design.	Pass
	Protective devices shall be selected on the basis of their having met the appropriate product standard (for example, IEC 61496 for active optoelectronic protective devices) or shall be designed according to one or several of the principles formulated in ISO 13849-1 or IEC 62061.	This requirement has been taken into account during design.	Pass

	Protective devices shall be installed and connected to the control system so that they cannot be easily defeated.	This requirement has been taken into account during design.	Pass
6.3.3.4	Provisions for alternative types of safeguards		
	Provisions should be made to facilitate the fitting of alternative types of safeguards on machinery where it is known that it will be necessary to change the safeguards because of the range of work to be carried out.	Not applicable.	N/A
6.3.4	Safeguarding to reduce emissions		
6.3.4.1	General		
	If the measures for the reduction of emissions at source specified in 6.2.2.2 are not adequate, the machine shall be provided with additional protective measures (see 6.3.4.2 to 6.3.4.5).		Pass
6.3.4.2	Noise		
	Additional protective measures against noise include - enclosures (see ISO 15667), - screens fitted to the machine, and - silencers (see ISO 14163).	No such hazards exist in this machine.	Pass
6.3.4.3	Vibration		
	Additional protective measures against vibration include - vibration isolators, such as damping devices placed between the source and the exposed person, - resilient mounting, and - suspended seats. For measures for vibration isolation of stationary industrial machinery see EN 1299.	No such hazards exist in this machine.	Pass
6.3.4.4	Hazardous substances		
	Additional protective measures against hazardous substances include - encapsulation of the machine (enclosure with negative pressure), - local exhaust ventilation with filtration, - wetting with liquids, and — special ventilation in the area of the	No such hazards exist in this machine.	Pass

	machine (air curtains, cabins for operators).		
6.3.4.5	Radiation		
	Additional protective measures against radiation include - use of filtering and absorption, and - use of attenuating screens or guards.	No such hazards exist in this machine.	Pass
6.3.5	Complementary protective measures		
6.3.5.1	General		
	Protective measures which are neither inherently safe design measures, nor safeguarding (implementation of guards and/or protective devices), nor information for use, could have to be implemented as required by the intended use and the reasonably foreseeable misuse of the machine. Such measures include, but are not limited to, those dealt with in 6.3.5.2 to 6.3.5.6.		Pass
6.3.5.2	Components and elements to achieve emergency stop function		
	If, following a risk assessment, a machine needs to be fitted with components and elements to achieve an emergency stop function for enabling actual or impending emergency situations to be averted, the following requirements apply:		
	- the actuators shall be clearly identifiable, clearly visible and readily accessible;	The actuators can be clearly identifiable, clearly visible and readily accessible	Pass
	- the hazardous process shall be stopped as quickly as possible without creating additional hazards, but if this is not possible or the risk cannot be reduced, it should be questioned whether implementation of an emergency stop function is the best solution;	The hazardous process can be stopped as quickly as possible without creating additional hazards	Pass
	- the emergency stop control shall trigger or permit the triggering of certain safeguard movements where necessary.	No this situation exists.	Pass
	Once active operation of the emergency stop device has ceased following an emergency	Reset is necessary before re-start.	Pass

	stop command, the effect of this command shall be sustained until it is reset.		
	This reset shall be possible only at the location where the emergency stop command has been initiated. The reset of the device shall not restart the machinery, but shall only permit restarting.	This requirement is complyied with by appropriate design of the emergency stop.	
	More details for the design and selection of electrical components and elements to achieve the emergency stop function are provided in IEC 60204.	Please see the related clauses.	Pass
6.3.5.3	Measures for the escape and rescue of trapped persons		
	Measures for the escape and rescue of trapped persons may consist, among others, of - escape routes and shelters in installations generating operator-trapping hazards, - arrangements for moving some elements by hand, after an emergency stop, - arrangements for reversing the movement of some elements, - anchorage points for descender devices, - means of communication to enable trapped operators to call for help.	Not applicable.	N/A
6.3.5.4	Measures for isolation and energy dissipation		
	Machines shall be equipped with the technical means to achieve isolation from power supply(ies) and dissipation of stored energy by means of the following actions:		
	a) isolating (disconnecting, separating) the machine (or defined parts of the machine) from all power supplies;	A main switch with lock is provided	Pass
	b) locking (or otherwise securing) all the isolating units in the isolating position;	Please see the report for EN60204	Pass
	c) dissipating or, if this is not possible or practicable, restraining (containing) any stored energy which can give rise to a hazard;	Please see the report for EN60204	Pass
	d) verifying, by means of safe working procedures, that the actions taken according to a), b) and c) above have produced the desired effect.	Please see the report for EN60204	Pass
6.3.5.5	Provisions for easy and safe handling of		

	machines and their heavy component parts		
	Machines and their component parts which cannot be moved or transported by hand shall be provided or be capable of being provided with suitable attachment devices for transport by means of lifting gear.	Appropriate attachments are provided.	Pass
	These attachments may be, among others,		
	- standardized lifting appliances with slings, hooks, eyebolts, or tapped holes for appliance fixing,	Such devices are used	Pass
	- appliances for automatic grabbing with a lifting hook when attachment is not possible from the ground,		N/A
	- fork locating devices for machines to be transported by a lift truck,	Such devices are used	Pass
	- lifting and stowing gear and appliances integrated into the machine.		N/A
	Parts of machinery which can be removed manually in operation shall be provided with means for their safe removal and replacement.		Pass
6.3.5.6	Measures for safe access to machinery		
	Machinery shall be so designed as to enable operation and all routine tasks relating to setting and/or maintenance to be carried out as far as possible by a person remaining at ground level.		Pass
	Where this is not possible, machines shall have built-in platforms, stairs or other facilities to provide safe access for those tasks; however, care should be taken to ensure that such platforms or stairs do not give access to danger zones of machinery. The walking areas shall be made from materials which remain as slip resistant as practicable under working conditions and, depending on the height from the ground, shall be provided with suitable guard-rails (see ISO 14122-3). In large automated installations, particular attention shall be given to safe means of access, such as walkways, conveyor bridges	Not applicable.	N/A

	or crossover points. Means of access to parts of machinery located at height shall be provided with collective means of protection against falls (for example, guard-rails for stairways, stepladders and platforms and/or safety cages for ladders). As necessary, anchorage points for personal protective equipment against falls from height shall also be provided (for example, in carriers of machinery for lifting persons or with elevating control stations). Openings shall, whenever possible, open towards a safe position. They shall be designed to prevent hazards due to unintended opening. The necessary aids for access shall be provided (steps, handholds, etc.). Control devices shall be designed and located to prevent their being used as aids for access. When machinery for lifting goods and/or persons includes landings at fixed levels, these shall be equipped with interlocking guards for preventing falls when the platform is not present at a level. Movement of the lifting platform shall be prevented while the guards are open.		
6.4	Information for use		
6.4.1	General requirements		
6.4.1.1	Drafting information for use is an integral part of the design of a machine (see Figure 2). Information for use consists of communication links, such as texts, words, signs, signals, symbols or diagrams, used separately or in combination to convey information to the user. Information for use is intended for professional and/or non-professional users.	All the information is stated in the appropriate place.	Pass
6.4.1.2	Information shall be provided to the user about the intended use of the machine, taking into account, notably, all its operating modes.		
	The information shall contain all directions required to ensure safe and correct use of the machine. With this in view, it shall inform and warn the user about residual risk.	All the information is stated in the instruction manual.	Pass

	The information shall indicate, as appropriate,		
	- the need for training, - the need for personal protective equipment, and - the possible need for additional guards or protective devices (see Figure 2, Footnote d).	All the information is stated in the instruction manual.	Pass
	It shall not exclude uses of the machine that can reasonably be expected from its designation and description and shall also warn about the risk which would result from using the machine in other ways than the ones described in the information, especially considering its reasonably foreseeable misuse.	All the information is stated in the appropriate place.	Pass
6.4.1.3	Information for use shall cover, separately or in combination, transport, assembly and installation, commissioning, use of the machine (setting, teaching/programming or process changeover, operation, cleaning, fault-finding and maintenance) and, if necessary, dismantling, disabling and scrapping.	All the information is stated in the instruction manual.	Pass
6.4.2	Location and nature of information for use		
	Depending on the risk, the time when the information is needed by the user and the machine design, it shall be decided whether the information — or parts thereof — are to be given		Pass
	a) in/on the machine itself (see 6.4.3 and 6.4.4),	Adequate information is stated in the instruction manual.	Pass
	b) in accompanying documents (in particular instruction handbook, see 6.4.5),	Adequate information is stated in the instruction manual.	Pass
	c) on the packaging,	Adequate information is stated in the instruction manual.	Pass
	d) by other means such as signals and warnings outside the machine.	Adequate information is stated	Pass

		in the instruction manual.	
	Standardized phrases shall be considered where important messages such as warnings are given (see also IEC 62079).		Pass
6.4.3	Signals and warning devices		
	Visual signals, such as flashing lights and audible signals such as sirens may be used to warn of an impending hazardous event such as machine start-up or overspeed. Such signals may also be used to warn the operator before the triggering of automatic protective measures (see 6.3.2.7).	Signals and warning devices are provided.	Pass
	It is essential that these signals		
	a) be emitted before the occurrence of the hazardous event, b) be unambiguous, c) be clearly perceived and differentiated from all other signals used, and d) be clearly recognized by the operator and other persons.	This requirement is taken into account during design and selection of the warning devices.	Pass
	The warning devices shall be designed and located such that checking is easy. The information for use shall prescribe regular checking of warning devices.		Pass
	The attention of designers is drawn to the possibility of “sensorial saturation”, which can result from too many visual and/or acoustic signals and which can also lead to defeating the warning devices.		Pass
6.4.4	Markings, signs (pictograms) and written warnings		
	Machinery shall bear all markings which are necessary		
	a) for its unambiguous identification, including at least		
	1) the name and address of the manufacturer, 2) the designation of series or type, and 3) the serial number, if any,	Adequate information is provided.	Pass
	b) in order to indicate its compliance with mandatory requirements, comprising		

	1) marking, and 2) written indications, such as the authorized representative of the manufacturer, designation of the machinery, year of construction, and intended use in potentially explosive atmospheres),	Adequate information is provided.	Pass
	c) for its safe use, for example,		
	1) maximum speed of rotating parts, 2) maximum diameter of tools, 3) mass (in kilograms) of the machine itself and/or of removable parts, 4) maximum working load, 5) necessity of wearing personal protective equipment, 6) guard adjustment data, and 7) frequency of inspection.	Adequate information is provided.	Pass
	Information printed directly on the machine should be permanent and remain legible throughout the expected life of the machine.	This requirement is complied with.	Pass
	Signs or written warnings indicating only “Danger” shall not be used.	This requirement is complied with.	Pass
	Markings, signs and written warnings shall be readily understandable and unambiguous, especially as regards the part of the function(s) of the machine to which they are related. Readily understandable signs (pictograms) should be used in preference to written warnings.	This requirement is complied with.	Pass
	Signs and pictograms should only be used if they are understood in the culture in which the machinery is to be used.	This requirement is complied with.	Pass
	Markings shall comply with recognized standards (for example, ISO 2972 or ISO 7000, for pictograms, symbols and colours in particular).	All the markings are standard.	Pass
6.4.5	Accompanying documents (in particular — instruction handbook)		
6.4.5.1	Contents		
	The instruction handbook or other written instructions (for example, on the packaging) shall contain, among others, the following:	All the related information is stated in the instruction	Pass

		handbook	
	a) information relating to transport, handling and storage of the machine, such as		
	1) storage conditions for the machine, 2) dimensions, mass value(s), position of the centre(s) of gravity, and 3) indications for handling (for example, drawings indicating application points for lifting equipment);	All the related information is stated in the instruction handbook	Pass
	b) information relating to installation and commissioning of the machine, such as		
	1) fixing/anchoring and dampening of noise and vibration requirements, 2) assembly and mounting conditions, 3) space needed for use and maintenance, 4) permissible environmental conditions (for example, temperature, moisture, vibration, electromagnetic radiation), 5) instructions for connecting the machine to power supply (particularly on protection against electrical overloading), 6) advice on waste removal/disposal, and 7) if necessary, recommendations related to protective measures which have to be implemented by the user — for example, additional safeguards (see Figure 2, Footnote d), safety distances, safety signs and signals;	All the related information is stated in the instruction handbook	Pass
	c) information relating to the machine itself, such as		
	1) detailed description of the machine, its fittings, guards and/or protective devices, 2) the comprehensive range of applications for which the machine is intended, including prohibited usages, if any, taking into account variations of the original machine if appropriate, 3) diagrams (especially schematic representation of safety functions), 4) data on noise and vibration generated by the machine, and on radiation, gases, vapours	All the related information is stated in the instruction handbook	Pass

	and dust emitted by it, with reference to the measuring methods (including measurement uncertainties) used, 5) technical documentation of electrical equipment (see IEC 60204), and 6) documents attesting that the machine complies with mandatory requirements;		
	d) information relating to the use of the machine, such as that related to or describing		
	1) intended use, 2) manual controls (actuators), 3) setting and adjustment, 4) modes and means for stopping (especially emergency stop), 5) risks which could not be eliminated by the protective measures implemented by the designer, 6) particular risks which can be generated by certain applications, by the use of certain fittings, and about specific safeguards necessary for such applications, 7) reasonably foreseeable misuse and prohibited applications, 8) fault identification and location, for repair and for restarting after an intervention, and 9) personal protective equipment needed to be used and the training that is required;	All the related information is stated in the instruction handbook	Pass
	e) information for maintenance, such as		
	1) the nature and frequency of inspections for safety functions, 2) specification of the spare parts to be used when these can affect the health and safety of operators, 3) instructions relating to maintenance operations which require a definite technical knowledge or particular skills and hence need to be carried out exclusively by skilled persons (for example, maintenance staff, specialists), 4) instructions relating to maintenance actions (replacement of parts, etc.) which do not require specific skills and hence may be	All the related information is stated in the instruction handbook	Pass

	carried out by users (for example, operators), and 5) drawings and diagrams enabling maintenance personnel to carry out their task rationally (especially fault-finding tasks);		
	f) information relating to dismantling, disabling and scrapping;	All the related information is stated in the instruction handbook	Pass
	g) information for emergency situations, such as		
	1) the operating method to be followed in the event of accident or breakdown, 2) the type of fire-fighting equipment to be used, and 3) a warning of possible emission or leakage of hazardous substance(s) and, if possible, an indication of means for fighting their effects;	All the related information is stated in the instruction handbook	Pass
	h) maintenance instructions provided for skilled persons [item e) 3) above] and maintenance instructions provided for unskilled persons [item e) 4) above], that need to appear clearly separated from each other.	All the related information is stated in the instruction handbook	Pass
6.4.5.2	Production of instruction handbook		
	The following applies to the production and presentation of the instruction handbook.		
	a) The type fount and size of print shall ensure the best possible legibility. Safety warnings and/or cautions should be emphasized by the use of colours, symbols and/or large print.	All the related information is stated in the instruction handbook	Pass
	b) The information for use shall be given in the language(s) of the country in which the machine will be used for the first time and in the original version.		Pass
	If more than one language is to be used, each should be readily distinguished from another, and efforts should be made to keep the translated text and relevant illustration together..		Pass
	NOTE In some countries the use of specific language(s) is covered by legal requirements		

	c) Whenever helpful to the understanding, text should be supported by illustrations. These illustrations should be supplemented with written details enabling, for example, manual controls (actuators) to be located and identified. They should not be separated from the accompanying text and should follow sequential operations.		Pass
	d) Consideration should be given to presenting information in tabular form where this will aid understanding. Tables should be adjacent to the relevant text.		Pass
	e) The use of colours should be considered, particularly in relation to components requiring quick identification.		Pass
	f) When information for use is lengthy, a table of contents and/or an index should be provided.		Pass
	g) Safety-relevant instructions which involve immediate action should be provided in a form readily available to the operator.		Pass
6.4.5.3	Drafting and editing information for use		
	The following applies to the drafting and editing of information for use.		Pass
	a) Relationship to model: the information shall clearly relate to the specific model of machine and, if necessary, other appropriate identification (for example, by serial number).	All the related information is stated in the instruction handbook	Pass
	b) Communication principles: when information for use is being prepared, the communication process “see – think – use” should be followed in order to achieve the maximum effect and should follow sequential operations. The questions, “How?” and “Why?” should be anticipated and the answers provided.		Pass
	c) Information for use shall be as simple and as brief as possible, and should be expressed in consistent terms and units with a clear explanation of unusual technical terms.		Pass
	d) When it is foreseen that a machine will be put to non-professional use, the instructions should be written in a form that is readily		Pass

	understood by the non-professional user. If personal protective equipment is required for the safe use of the machine, clear advice should be given, for example, on the packaging as well as on the machine, so that this information is prominently displayed at the point of sale.		
	e) Durability and availability of the documents: documents giving instructions for use should be produced in durable form (i.e. they should be able to survive frequent handling by the user). It can be useful to mark them “keep for future reference”. Where information for use is kept in electronic form (CD, DVD, tape, hard disk, etc.), information on safety-related issues that need immediate action shall always be backed up with a hard copy that is readily available.		Pass
7	Documentation of risk assessment and risk reduction		Pass
	The documentation shall demonstrate the procedure that has been followed and the results that have been achieved. This includes, when relevant, documentation of		Pass
	a) the machinery for which the risk assessment has been made (for example, specifications, limits, intended use);	Please see the risk assessment report in detail.	Pass
	b) any relevant assumptions that have been made (loads, strengths, safety factors, etc.);		Pass
	c) the hazards and hazardous situations identified and the hazardous events considered in the risk assessment;		Pass
	d) the information on which risk assessment was based (see 5.2):		Pass
	1) the data used and the sources (accident histories, experience gained from risk reduction applied to similar machinery, etc.);		Pass
	2) the uncertainty associated with the data used and its impact on the risk assessment;		Pass
	e) the risk reduction objectives to be achieved by protective measures;		Pass

	f) the protective measures implemented to eliminate identified hazards or to reduce risk;		Pass
	g) residual risks associated with the machinery;		Pass
	h) the result of the risk assessment (see Figure 1);		Pass
	i) any forms completed during the risk assessment.		Pass
	Standards or other specifications used to select protective measures referred to in f) above should be referenced.		Pass

EN ISO 13849-1-2015			
Clause	Requirement – Test	Result - Remark	Verdict
1.	Scope		---
2	Normative references		---
3	Terms, definitions, symbols and abbreviated terms		---
3.1	Terms and definitions		---
	For the purposes of this document, the terms and definitions given in ISO 12100 and IEC 60050-191 and the following apply.		---
3.2	Symbols and abbreviated terms		---
4	Design considerations		---
4.1	Safety objectives in design		---
	The SRP/CS shall be designed and constructed so that the principles of ISO 12100 are fully taken into account (see Figures 1 and 3). All intended use and reasonable foreseeable misuse shall be considered.		Pass
4. 2	Strategy for risk reduction		---
4.3	Determination of required performance level (PLr)		---
	For each selected safety function to be carried out by a SRP/CS, a required performance level (PLr) shall be determined and documented (see Annex A for guidance on determining PLr). The determination of the required performance level is the result of the risk assessment and refers to the amount of the risk reduction to be carried out by the safety-related parts of the control system (see Figure 2). The greater the amount of risk reduction required to be provided by the SRP/CS, the higher the PLr shall be.		Pass
4.4	Design of SRP/CS		---
	Part of the risk reduction process is to determine the safety functions of the machine.		Pass

	This will include the safety functions of the control system, e.g. prevention of unexpected start-up. A safety function may be implemented by one or more SRP/CS, and several safety functions may share one or more SRP/CS [e.g. a logic unit, power control element(s)]. It is also possible that one SRP/CS implements safety functions and standard control functions. The designer may use any of the technologies available, singly or in combination. SRP/CS may also provide an operational function (e.g. an AOPD as a means of cycle initiation).		
4.5	Evaluation of the achieved performance level PL and relationship with SIL		---
4.6	Software safety requirements		---
4.7	Verification that achieved PL meets PLr		---
	For each individual safety function the PL of the related SRP/CS shall match the required performance level (PLr) determined according to 4.3 (see Figure 3). If this is not the case, an iteration in the process described in Figure 3 is necessary. The PL of the different SRP/CS which are part of a safety function shall be greater than or equal to the required performance level (PLr) of this safety function.		N/A
4.8	Ergonomic aspects of design		---
	The interface between operators and the SRP/CS shall be designed and realized such that no person is endangered during all intended use and reasonable foreseeable misuse of the machine [see also ISO 12100, EN 614- 1, ISO 9355- 1, ISO 9355- 2, ISO 9355- 3, EN 1005- 3, IEC 60204- 1:2005, Clause 10, IEC 60447 and IEC 61310]. Ergonomic principles shall be used so that the machine and the control system, including the safetyrelated parts, are easy to use, and so that the operator is not tempted to act in a hazardous manner. The safety requirements for observing ergonomic principles given in ISO		Pass

	12100:2010, 6.2.8, apply.		
5.6	Mechanical stop		---
	If an interlocking device is declared by the manufacturer of the device to be suitable for use as a mechanical stop the maximum impact energy withstand value shall be given (see also 9.2.2 r)).		Pass
5	Safety functions		---
5.1	Specification of safety functions		---
	This clause provides a list and details of safety functions which can be provided by the SRP/CS. The designer (or type-C standard maker) shall include those necessary to achieve the measures of safety required of the control system for the specific application.		N/A
5.2	Details of safety functions		---
6	Categories and their relation to MTTFD of each channel, DCavg and CCF		---
6.1	General		---
	The SRP/CS s hall b e i n a ccordance w ith t he r equirements o f o ne o r m ore o f t he f ive c ategories specified in 6.2. Categories are the basic parameters used to achieve a specific PL. They state the required behaviour of the SRP/CS in respect of its resistance to faults based on the design considerations described in Clause 4.		N/A
6.2	Specifications of categories		---
6.3	Combination of SRP/CS to achieve overall PL		---
	A safety function can be realized by a combination of several SRP/CS: input system, signal processing unit, output system. These SRP/CS may be assigned to one and/or different categories. For each SRP/CS used, a category according to 6.2 shall be selected. For the overall combination of these SRP/CS, an overall PL may be identified using the methods described in this clause. In this case, the validation of the combination of SRP/CS is required (see Figure 3).		N/A
7	Fault consideration, fault exclusion		---

7.1	General		---
7.2	Fault consideration		---
	ISO 13849- 2 lists the important faults and failures for the various technologies. The lists of faults are not exhaustive and, if necessary, additional faults shall be considered and listed. In such cases, the method of evaluation should also be clearly elaborated. For new components not mentioned in ISO 13849- 2, a failure mode and effects analysis (FMEA, see IEC 60812) shall be carried out to establish the faults that are to be considered for those components.		Pass
7.3	Fault exclusion		---
	It is not always possible to evaluate SRP/CS without assuming that certain faults can be excluded. For detailed information on fault exclusions, see ISO 13849- 2. Fault exclusion is a compromise between technical safety requirements and the theoretical possibility of occurrence of a fault.		Pass
8	Validation		---
	The design of the SRP/CS shall be validated (see Figure 3). The validation shall demonstrate that the combination of SRP/CS providing each safety f unction meets a ll relevant requirements of t his part of ISO 13849. For details of validation, see ISO 13849- 2.		Pass
9	Maintenance		---
	Preventive or corrective maintenance can be necessary to maintain the specified performance of the safety-related parts. Deviations with time from the specified performance can lead to a deterioration in safety or even to a hazardous situation. The information for use of the SRP/CS shall include instructions for the maintenance (including periodic inspection) of the SRP/CS.		Pass
10	Technical documentation		---

	When designing a SRP/CS, its designer shall document at least the following information relevant to the safety-related part: — safety function(s) provided by the SRP/CS; — the characteristics of each safety function; — the exact points at which the safety-related part(s) start and end;— environmental conditions;— the performance level (PL);— the category or categories selected;— the parameters relevant to the reliability (MTTFD, DC, CCF and mission time);— measures against systematic failure;— the technology or technologies used;— all safety-relevant faults considered;— justification for fault exclusions (see ISO 13849- 2);— the design rationale (e.g. faults considered, faults excluded);— software documentation;— measures against reasonably foreseeable misuse.		Pass
11	Information for use		---
	The principles of ISO 12100:2010, 6.4.5.2, and the applicable sections of other relevant documents (e.g. IEC 60204- 1:2005, Clause 17), shall be applied. In particular, that information which is important for the safe use of the SRP/CS shall be given to the user. This shall include, but is not limited to the following: — the limits of the safety-related parts to the category(ies) selected and any fault exclusions;— the limits of the SRP/CS and any fault exclusions (see 7.3), for which, when essential for maintaining the selected category or categories and safety performance, appropriate information (e.g. for modification, maintenance and repair) shall be given to ensure the continued justification of the fault exclusion(s);— the effects of deviations from the specified performance on the safety function(s);— clear descriptions of the		Pass

	interfaces to the SRP/CS and protective devices;— response time; — operating limits (including environmental conditions);— indications and alarms; — muting and suspension of safety functions; — control modes;— maintenance (see Clause 9);— maintenance check lists; — ease of accessibility and replacing of internal parts;— means for easy and safe trouble shooting;— information explaining the applications for use relevant to the category to which reference is made;— checking test intervals where relevant. Specific information shall be provided on the category or categories and performance level of the SRP/CS, as follows: — dated reference to this part of ISO 13849 (i.e. “ISO 13849- 1:2006”); the Category, B, 1, 2, 3, or 4; — the performance level, a, b, c, d or e.		

3.2 Airborne noise Report

I. Applicable standards

1. EN ISO 3744:2010 Acoustics - Determination of sound power levels and sound energy levels of noise sources using sound pressure - Engineering methods for an essentially free field over a reflecting plane.
2. EN ISO 11202: Acoustics-Noise emitted by machinery and equipment-Measurement of emission sound pressure levels at the work station and at other specified positions-Survey method in situ.
3. ISO/TR 11688-1: Acoustics-Recommended practice for the design of low-noise machinery and equipment -Part 1 : Planning.

II. Review instrument

The sound level meter used in the noise measurement is TES1350A manufactured by TES Electrical Electronic Corp. with the following features

- Portable with light weight easy operation.
- Measurement range from 35 to 130 dBA.
- Type 1 precision.
- With “F”&“S” detect mode in accordance with IEC 651 type 1.
- Built in A-weighting network.
- Equipped with a high prepoarized condenser microphone.
- With automatic&manual display.
- DC output for level recorder.

III. Measurement method

The measurements of this review have been carried out by a hand-held sound level meter, and readings are taken by A-frequency weighting at each measuring position.
For operator positions in process of measurement, the measuring instrument is to be set at a distance of 1 m from the machine and 1.5 m above the floor.

IV. Review environment

The review was carried out in the location of machine inside the factory, and the background noise has been ensured that its measuring value is lower than that of machine.

V. Review result

1. Sound pressure level (machine on “Stand by” and normal load condition)

Position	1	2	3	4	5
Reading (dB (A))	69.2	68.3	69.3	69.8	68.7

2. Sound pressure level (machine on full load condition)

Position	1	2	3	4	5
Reading (dB (A))	78.5	78.8	77.4	77.6	78.6

The following is the calculation formula of L_W (Sound power level):

$Lw = Lpf + 10 \times \log (S/S_o)$

· Lpf is the A-weighted or frequency bank surface sound pressure level
· S is the area of the measurement surface in square meters20 m^2
· S^0 is 1 m^2

3.3 EN 60204-1 Report

EN 60204-1:2018 Safety of machinery - Electrical equipment of machines - Part 1: General requirements	
Report reference No......:	MD-TCF-220406-38043
Date of issue .....:	2022/04/11
Total number of pages.....:	68
The third party.....:	Hangzhou GSG Testing Technology Service Co. , Ltd.
Address.....:	Room 2006, Building 4, East Chuangzhi Building, No. 511, xiasha No. 2 Big Street, Qiantang District, Hangzhou city, Zhejiang, China
Applicant.....:	Zhejiang Haobang Communication Technology Co. , Ltd.
Address.....:	No.818 Biyun Street, Bihu Town, Liandu District, Lishui City, Zhejiang Province, China
Manufacturer.....:	Zhejiang Haobang Communication Technology Co. , Ltd.
Address.....:	No.818 Biyun Street, Bihu Town, Liandu District, Lishui City, Zhejiang Province, China
TCF specification:	
Standard.....:	EN 60204-1:2018
TCF procedure.....:	CB
Non-standard Review method……..:	N/A
TCF Form No.....:	IEC60204_1A
TCF Form(s) Originator.....:	GSG
Master TRF.....:	Dated 2019-11
TCF item description.....:	Fiber Cleaver
Model/Type reference.....:	0708, 0709, 0711, 0712, 0713, 0715, 1716, 1717, 1718, A01, A02, C12, C15, C16, 0808, 0809, G6, G7, G8, G9, G10

Reviewing procedure and Reviewing location:	
☒	Reviewing procedure: TMP Reviewed by (name + signature)..... Approved by (+ signature)..... Reviewing location/ address..... : Room 2006, Building 4, East Chuangzhi Building, No. 511, xiasha No.2 Big Street, Qiantang District, Hangzhou city, Zhejiang, China
☐	Reviewing procedure: WMT Reviewed by (name + signature)..... Witnessed by (+ signature)..... Approved by (+ signature)..... Reviewing location/ address..... :
☐	Reviewing procedure: SMT Reviewed by (name + signature)..... Approved by (+ signature)..... Supervised by (+ signature)..... Reviewing location/ address..... :
☐	Reviewing procedure: RMT Reviewed by (name + signature)..... Approved by (+ signature)..... Supervised by (+ signature)..... Reviewing location/ address..... :

Summary of Reviewing:	
Reviews performed (name of Review and Review clause): **All of Review are performed at:** Room 2006, Building 4, East Chuangzhi Building, No. 511, xiasha No. 2 Big Street, Qiantang District, Hangzhou city, Zhejiang, China	**Reviewing location:** Room 2006, Building 4, East Chuangzhi Building, No. 511, xiasha No. 2 Big Street, Qiantang District, Hangzhou city, Zhejiang, China
Summary of compliance with National Differences: **N/A**	
Copy of marking plate /	

Review item particulars..... :	
Classification of installation and use..... :	Class I
Supply Connection..... :	Terminal
Possible Review case verdicts:	
- Review case does not apply to the Review object :	N/A
- Review object does meet the requirement..... :	Pass
- Review object does not meet the requirement..... :	Fail
Reviewing..... :	
Date of receipt of Review item..... :	2022/04/06
Date (s) of performance of Reviews..... :	2022/04/11

General remarks:

The review results presented in this report relate only to the object reviewed.
This report shall not be reproduced, except in full, without the written approval of the Issuing reviewing laboratory.
"(see Enclosure #)" refers to additional information appended to the report.
"(see appended table)" refers to a table appended to the report.

Throughout this report a comma (point) is used as the decimal separator.

This review report include:

Attachment to review Report IEC60204-1, **5** page(s)

IEC 60204-1			
Clause	Requirement - Test	Result - Remark	Verdict
4	**GENERAL REQUIREMENTS**		—
4.1	**General**		—
	Hazards relevant to the electrical equipment are assessed as part of the overall risk assessment of the machine as described		P
4.2	**Selection of equipment**		—
4.2.1	Electrical components and devices shall be: - suitable for their intended use - conform to IEC standards where such exist - be applied in accordance with supplier's instructions	suitable for their intended use	P
4.2.2	Where appropriate electrical equipment in compliance with IEC 61439 series	See the electrical components list.	P
4.3	**Electrical supply**		—
4.3.1	Electrical equipment to be designed for correct operation within the conditions of mains power supply		P
	- as stated below (4.3.2 or 4.3.3)	See nameplate	P
	- or as specified by the user		N/A
	- or as specified by the supplier (4.3.4)		N/A
4.3.2	AC supplies		P
	Supply Voltage: Steady state voltage: 0.9..... 1.1 of nominal voltage	See nameplate	P
	Frequency: 0.99.....1.01 of nominal frequency continuously; 0.98.....1.02 short time.	See nameplate	P
	Harmonics: not exceeding 12 % of the total r.m.s. etc.		P
	Voltage unbalance: not exceeding 2% deviation		P
	Voltage interruption: interrupted or at zero voltage for not more than 3 ms at any random time in the supply cycle with more than 1 s between successive interruptions		P
	Voltage dips not exceeding 20 % of the rms voltage of the supply for more than one cycle with more than 1 s between successive dips		P
4.3.3	DC supplies		N/A

IEC 60204-1			
Clause	Requirement - Test	Result - Remark	Verdict
	Supply voltage: - batteries: 0.85 – 1.15 of nominal voltage - battery-operated vehicles: 0.7 – 1.2 of nom. volt. - from converting equipment: 0.9 – 1.1 of nom. volt.		N/A
	Voltage interruption: - batteries: not exceeding 5 ms - converting equipment: not exceeding 20 ms		N/A
	Ripple (peak-to-peak): not exceed. 0.15 of nom. volt.		N/A
4.3.4	Special supply systems (e.g. on-board generators, DC bus) limits acc. 4.3.2 /.3 may be exceeded, provided equipment is designed accordingly		N/A
4.4	**Physical environment and operating conditions**		—
4.4.1	Electrical equipment suitable for the physical environment and operating conditions of its intended use.	Detail in the instruction manual.	P
4.4.2	Immunity and/or emission tests required unless	DoC	P
	- incorporated devices and components comply with the relevant product standard and		P
	- installation and wiring according supplier instructions or Annex H:		P
4.4.3	Electrical equipment shall be capable of operating correctly in the intended ambient air temperature. (Minimum requirement: air temperatures of +5 °C and +40 °C)	See the instruction manual.	P
4.4.4	Electrical equipment shall be capable of operating correctly when the relative humidity is up to 50 % at a maximum temperature of +40 °C	See the instruction manual.	P
	Harmful effects of condensation shall be avoided		P
4.4.5	Electrical equipment shall be capable of operating correctly at altitudes up to 1 000 m above mean sea level	See the instruction manual.	P
	For equipment to be used at higher altitudes the reduction of dielectric strength, switching capability and cooling effects shall be taken into account		P
4.4.6	Electrical equipment shall be adequately protected against the ingress of solids and liquids (see 11.3)	Electrical cabinet has been complied with.	P
4.4.7	When equipment is subjected to radiation, additional measures shall be taken		N/A

IEC 60204-1			
Clause	Requirement - Test	Result - Remark	Verdict
4.4.8	Undesirable effects of vibration, shock and bump avoided by suitable mans		P
4.5	Electrical equipment designed to withstand the effects of transportation and storage within a temperature range of - 25 to + 55 °C	See the instruction manual.	P
4.6	Heavy or bulky electrical equipment of the machine provided with suitable means for handling		P
5	**INCOMING SUPPLY CONDUCTOR TERMINATIONS AND DEVICES FOR DISCONNECTING AND SWITCHING OFF**		—
5.1	**Incoming supply conductor terminations**		—
	Recommendation that electrical equipment of a machine is connected to a single supply (For large complex machinery, there can be a need for more than one incoming supply)	See nameplate	P
	Unless a plug is provided, supply conductors should be terminated at the supply disconnecting device	The main power switch has been provided in the machine.	P
	Neutral conductor clearly indicated in technical documentation with “N” (see cl. 16.1)		P
	A separate terminal, labelled N provided (it may be part of the supply disconnecting device)		P
	No connection between neutral conductor and protective bonding circuit	No connection between N and PE.	P
	Exception: a connection may be made between the neutral terminal and the PE terminal at the point of the connection of the electrical equipment to a TN-C supply system.		P
	For machines supplied from parallel sources the requirements of IEC 60364-1 apply		P
	All terminals of incoming supply clearly marked in ac. with IEC 60445)		P
5.2	**Terminal for connection of external protective conductor (PE)**		—
	For each incoming supply, a terminal shall be provided in the same compartment as the line conductor terminals for connection to the external protective conductor	There is PE terminal for the earthling system.	P
	Terminal size according to table 1 in relation to the line conductors	This requirement has been complied with.	P

IEC 60204-1			
Clause	Requirement - Test	Result - Remark	Verdict
	Where an external protective conductor other than copper is used, the terminal size and type shall be selected accordingly		P
	At each incoming point this terminal shall be marked or labelled with the letters PE		P
5.3	**Supply disconnecting device**		—
5.3.1	A supply disconnecting device shall be provided: - for each incoming supply to a machine - for each on-board power supply	provided	P
	Where two or more such devices exist, interlocks shall be provided to prevent hazardous situations		P
5.3.2	The supply disconnecting device shall be one of the following:		—
	a) a switch-disconnector, acc. to IEC 60947-3 for at least appliance category AC-23 B or DC-23 B		N/A
	b) a control and protective switching device suitable for insulation acc. to IEC 60947-6-2		N/A
	c) a circuit-breaker suitable for isolation (acc. to IEC 60947-2)		P
	d) any other switching device in accordance with an IEC product standard for that device and which meets the isolation requirements and the appropriate utilization category and/or specified endurance requirements		N/A
	e) a plug/socket combination for a flexible cable supply		N/A
5.3.3	A disconnection device acc. to 5.3.2 a) to d) has to fulfil all of the following requirements		—
	- isolate the electrical equipment from the supply and have one OFF (isolated) and one ON position marked with "O" and "I"		P
	- have a visible contact gap or a position indicator which cannot indicate OFF (isolated) until all contacts are actually open and the requirements for the isolating function have been satisfied		P
	- have an operating means (see 5.3.4)		P
	- coloured black or grey recommended (If used as an emergency stop, red/yellow combination selected)		P

IEC 60204-1			
Clause	Requirement - Test	Result - Remark	Verdict
	- be provided with a means permitting it to be locked in the OFF position (padlocks). When so locked, remote as well as local closing shall be prevented		P
	- disconnect all live conductors of its power supply circuit For TN supply systems, the neutral conductor may or may not be disconnected except in countries where disconnection of the neutral conductor (when used) is compulsory		P
	- have a braking capacity to interrupt the system, when the largest motor is stalled		P
	A plug/socket combination used as a disconnection device shall: –comply with 13.4.5 –have a braking capacity to interrupt the system, when the largest motor is stalled		N/A
5.3.4	Operating means of supply disconnecting devices (e.g. a handle) shall be external to the enclosure	Meet requirements	P
	Exception: for power-operated switchgear this can be some other means (e.g. pushbutton) instead of a handle		P
	The operating means shall be easily accessible and located between 0,6 m and 1,9 m above the servicing level (upper limit of 1,7 m is recommended)		P
	Where intended for emergency operation, see 10.7.3 or 10.8.3		P
	Where not intended for emergency operation - the colours black or grey are recommended - a supplementary cover or door that can be readily opened without a key or tool may be provided. It shall clearly show its function, e.g. by relevant symbols		P

IEC 60204-1			
Clause	Requirement - Test	Result - Remark	Verdict
5.3.5	The following circuits need not be disconnected by the supply disconnecting device: - lighting circuits for lighting needed during maintenance or repair; - socket outlets for the exclusive connection of repair or maintenance tools and equipment; - undervoltage protection circuits that are only provided for automatic tripping in the event of supply failure; - circuits supplying equipment that should normally remain energized for correct operation Such circuits should be provided with their own disconnecting device.		P
	Where expected circuits are not disconnected by the supply disconnecting device:		—
	- permanent warning labels shall be placed close to the operating means	No this parts	N/A
	- a statement shall be included in the maintenance manual and		N/A
	-the conductors are identified by colour, taking into account the recommendation of Cl.13.2.4, or -expected circuits are separated from other circuits, or -expected circuits are identified by permanent warning labels		N/A
5.4	**Devices for removal of power for prevention of unexpected start-up**		—
	Devices for removal of power for the prevention of unexpected start-up shall be provided where this can create a hazard	The function has been achieved.	P
	They shall be appropriate and convenient for the intended use, suitably placed, and readily identifiable as to their function and purpose	The means have been provided.	P
	Where not obvious, they shall be marked to indicate the extent of removal of power		P
	Devices in accordance with 5.3.2 may be used for this purpose		P
	Disconnectors, withdrawable fuse links and withdrawable links only used, if located in enclosed electrical operator area (see 3.1.23)		P

IEC 60204-1			
Clause	Requirement - Test	Result - Remark	Verdict
	Devices that do not fulfil the isolation function (e.g. a contactor switched off by a control circuit etc.) only used for tasks such as: - inspections; - adjustments; - work on the electrical equipment where there are only minor risks (as described)	This does not exist.	N/A
5.5	**Devices for isolating electrical equipment**		—
	Devices shall be provided for isolating electrical equipment or parts of it to enable work	These requirements have been complied with.	P
	Such devices shall be: –appropriate and convenient for the intended use; –suitably placed; –readily identifiable as to which part or circuit of the equipment is served. They shall be marked unless their function and purpose is obvious		P
	Where it is necessary to work on individual parts of the electrical equipment of a machine, or on one of a number of machines fed by a common conductor bar, conductor wire or inductive power supply system, a disconnecting device is provided for each part, or for each machine, requiring separate isolation	No this situation in the machine	N/A
	In addition, the following devices that fulfil the isolation function may be provided for this purpose: - devices described in 5.3.2; - disconnectors, withdrawable fuse links and withdrawable links only used, if located in enclosed electrical operator area (see 3.1.23) and information provided (see cl 17)		N/A
5.6	**Protection against unauthorized, inadvertent and/or mistaken connection**		—
	Where devices acc. to cl. 5.4 and 5. are located outside an enclosed electrical operator area, locking means in OFF position shall be provided When so secured, local and remote reconnection shall be prevented	See the 5.3.3.	P
	Where these devices are located inside an enclosed electrical operator area, other means of protection against unintended reconnection can be sufficient	Not applicable.	N/A
	Where a plug/socket combinations is so positioned that it can be kept under the immediate supervision of the person carrying out the work, means for securing in the disconnected state are not needed	Not applicable.	N/A

IEC 60204-1			
Clause	Requirement - Test	Result - Remark	Verdict
6	**PROTECTION AGAINST ELECTRIC SHOCK**		—
6.1	The electrical equipment shall provide protection against electric shock by basic protection and fault protection	Bonding	P
	Where the measures for protection as in 6.2, 6.3 and 6.4 are not practicable, other measures from IEC 60364-4-41 may be used (e.g. SELV)		P
6.2	**Basic protection**		—
6.2.1	For each circuit the measures of 6.2.2, 6.2.3 and, where applicable, 6.2.4 shall apply		P
	Where not appropriate, other measures as defined in IEC 60364-4-41 may be applied (see also 6.2.5 and 6.2.6)		P
	For equipment in places open to all persons including children, 6.2.2 with a minimum protection of IP4X or IPXXD, or 6.2.3 shall be applied		P
6.2.2	Live parts shall be located inside enclosures that provide protection against contact with live parts of at least IP2X or IPXXB.	The cabinet is IP32	P
	Where the top surfaces of the enclosure are readily accessible, the minimum degree of protection against contact with live parts provided by the top surfaces shall be IP4X or IPXXD.		P
	Opening an enclosure (i.e. opening doors, lids, covers, etc) shall be possible only under one of the following conditions:		—
	a) The use of a key or tool is necessary for access All live parts (including those on the inside of doors) likely to be touched when resetting or adjusting devices intended for such operations while the equipment is still connected, are protected against contact to at least IP2X or IPXXB Other live parts on the inside of doors are protected against unintentional direct contact to at least IP1X or IPXXA.	The all requirements have been complied with by a main power switch, detail see the 5.3.3 and the 6.2.2.	P

IEC 60204-1			
Clause	Requirement - Test	Result - Remark	Verdict
	b) The disconnection of live parts inside the enclosure before it can be opened (see explanation) Exception: a key or tool as prescribed by the supplier can be used to defeat the interlock, provided that the following conditions are met: - it is possible at all times while the interlock is defeated to open the disconnecting device and lock the disconnecting device in the OFF position or otherwise prevent unauthorised closure of the disconnecting device; - upon closing the door, the interlock is automatically restored - all live parts (), likely to be touched … are protected against unintentional contact to at least IP2X or IPXXB and other live parts on the inside of doors shall be protected against unintentional contact to at least IP1X or IPXXA - relevant information about the procedure for the defeat of the interlock is provided with the instructions for use of the electrical equipment - means are provided to restrict access to live parts behind doors that are not directly interlocked with the disconnecting means to skilled or instructed persons All parts still alive after switching off the disconnecting device shall be protected against direct contact to at least IP 2X or IP XXB and be marked with a warning sign in accordance with 16.2.1 except for: - parts that can be live only because of connection to interlocking circuits and that are distinguished by colour as potentially live in accordance with 13.2.4 - the supply terminals of the supply disconnecting device when the latter is mounted alone in a separate enclosure	See above	N/A
	c) Opening without the use of a key or a tool and without disconnection of live parts shall be possible only when all live parts are protected against contact to at least IP2X or IPXXB. Where barriers provide this protection, either they shall require a tool for their removal or all live parts protected by them shall be automatically disconnected when the barrier is removed. Where a hazard can be caused by manual action of devices () , such action shall be prevented by barriers or obstacles that require a tool for their removal	See above	N/A

IEC 60204-1			
Clause	Requirement - Test	Result - Remark	Verdict
6.2.3	Live parts protected by insulation shall be completely covered with insulation that can only be removed by destruction and that is capable of withstanding the mechanical, chemical, electrical, and thermal stresses to which it can be subjected under normal operating conditions	The live parts have been completely covered.	p
	Note: Paint, varnish lacquer etc. alone are generally considered inadequate		N/A
6.2.4	Live parts having a residual voltage greater than 60 V when disconnected, shall be discharged to 60 V or less within 5 s, if this does not interfere with the proper functioning of the equipment	The residual voltage has been complied with the machine.	P
	Exempted are components having stored charges of 60 µC or less		P
	Where not possible , an appropriate warning shall be placed according to the details given		P
	In case of pins of plugs etc. the discharge time shall not exceed 1s. Otherwise such conductors shall be protected to at least IP2X or IPXXB.		P
	If above requirements cannot be achieved, additional disconnecting devices or appropriate warning devices shall be provided		N/A
	When equipment is accessible to all persons incl. children, warnings are not sufficient and a protection of IP4X or IPXXD is required		N/A
6.2.5	For protection by barriers, the requirements of IEC 60364-4-41 shall apply (412.2)		N/A
6.2.6	For protection by placing out of reach or protection by obstacles, the requirements of IEC 60364-4-41 shall apply (412.4 and 412.3)		N/A
	For conductor wire or bar systems with less than IP2X or IPXXB, see 12.7.1		N/A
6.3	**Fault protection**		—
6.3.1	For each circuit or part of el. equipment at least one of the measures of 6.3.2 to 6.3.3 shall be applied:		—
	-Prevention of the occurrence of a touch voltage	Protection earthing	P
	-Protection by automatic disconnection of supply	Circuit breaker and/or fuse	P
6.3.2	Prevention of the occurrence of a touch voltage		—

IEC 60204-1			
Clause	Requirement - Test	Result - Remark	Verdict
6.3.2.1	Measures to prevent the occurrence of a touch voltage include the following: - provision of class II equipment or by equivalent insulation; - electrical separation		—
6.3.2.2	Protection by provision of one or more of the following:		—
	- class II electrical devices or apparatus (double insulation, reinforced insulation or by equivalent insulation in accordance with IEC 61140) or		N/A
	- switchgear and control gear assemblies having total insulation in accordance with IEC 61439-1or	Meet requirements	P
	- supplementary or reinforced insulation in accordance with IEC 60364-4-41(413.2)		N/A
6.3.2.3	For protection by electrical separation the requirements of IEC 60364-4-41 apply (413.5)		N/A
6.3.3	Protection by automatic disconnection of supply		—
	This measure consists of the interruption of one or more line conductors in a time within the limits specified in Annex A for TN and TT systems		P
	This requires co-ordination between: -the type of supply, the source impedance and the earthing system -several impedance values -characteristics of protective devices -(For details see 18.2)		P
	This protective measure comprises both:		—
	-protective bonding of exposed parts (8.2.3)		P
	-one of the following:		—
	a) In TN systems, the following protective devices may be used:	The overcurrent protective device has been provided.	—
	•overcurrent protective device or		P
	•residual current protective devices (RCDs) and associated overcurrent protective devices		P
	b) In TT systems either:		—
	•RCDs and associated overcurrent protective devices or		N/A
	•overcurrent protective devices provided a low fault loop impedance is assured		N/A

IEC 60204-1			
Clause	Requirement - Test	Result - Remark	Verdict
	c) In IT-Systems the requirements of IEC 60364-4-41 shall be fulfilled		—
	During an insulation fault an acoustic and an optical signal shall be sustained. The acoustic signal may manually be muted		N/A
	Where automatic disconnection is provided under a) and disconnection acc. to A.1.1 cannot be assured, supplementary protective bonding shall be provided to fulfil A.1.3		N/A
	Where protection of a PDS (power drive system) is not provided by the converter, the necessary protection shall be acc. to the converter manufacturer's instructions		N/A
6.4	**Protection by the use of PELV**		—
6.4.1	PELV circuits shall satisfy all of the following conditions:		—
	a) the nominal voltage does not exceed: -25 V AC r.m.s. or 60 V ripple-free AC when the equipment is normally used in dry locations and when large area contact of live parts with the human body is not expected; or -6 V AC r.m.s. or 15 V ripple-free DC in all other cases;		N/A
	b) one side of the circuit or one point of the source of the supply of that circuit is connected to the protective bonding circuit;		N/A
	c) live parts of PELV circuits shall be electrically separated from other live circuits (see IEC 61558)		N/A
	d) conductors of each PELV circuit shall be physically separated from those of any other circuit. If this requirement is impracticable, the insulation provisions of 13.1.3 shall apply		N/A
	e) plugs and socket-outlets for a PELV circuit shall conform to the following: -plugs shall not to enter socket-outlets of other voltage systems -socket-outlets shall not admit plugs of other voltage systems		N/A
6.4.2	The sources for PELV shall be one of the following:		—
	- a safety isolating transformer in accordance with IEC 61558-1 and IEC 61558-2-6 or		N/A

IEC 60204-1			
Clause	Requirement - Test	Result - Remark	Verdict
	- a source of current with a degree of safety equivalent to that of the safety isolating transformer or		N/A
	- a source independent of circuit with higher voltage (e.g. battery or diesel –driven) or		N/A
	- electronic power supply conforming to appropriate standards		N/A
7.	**PROTECTION OF EQUIPMENT**		—
7.1	This Clause 7 details the measures to be taken to protect equipment against the effects of: • overcurrent arising from a short-circuit; • overload and/or loss of cooling of motors; • abnormal temperature; • loss of or reduction in the supply voltage; • overspeed of machines/machine elements; • earth fault/residual current; • incorrect phase sequence; • overvoltage due to lightning and switching surges.		—
7.2	**Overcurrent protection**		—
7.2.1	Overcurrent protection shall be provided where the current in any circuit can exceed the rating of a component or the capacity of a conductor	Circuit breaker or fuse	P
7.2.2	Supply conductors		—
	Unless otherwise specified by the user, the supplier of the electrical equipment is not responsible for providing the supply conductors or the overcurrent protective device for it	Meet requirements	P
	In the installation documents, the data necessary for conductor dimensioning and selecting the overcurrent protective device are stated (see 7.2.10 and 17.4)		P
7.2.3	Power circuits		—
	Devices for detection and interruption of overcurrent, selected in accordance with 7.2.10, are applied to each live conductor including supplies to control circuit transformers.	The PE conductor is not disconnected in any case.	P

IEC 60204-1			
Clause	Requirement - Test	Result - Remark	Verdict
	The following conductors shall not be disconnected without disconnecting all associated live conductors: -the neutral conductor of AC power circuits; -the earthed conductor of DC power circuits; -DC power conductors bonded to exposed conductive parts of mobile machines.		P
	Where the cross-section area of the neutral conductor is at least equal to the line conductor, no overcurrent detection nor disconnecting device is required for that conductor		P
	Otherwise the measures detailed in 524 of IEC 60364-5-52:2009 shall apply		P
	In IT-Systems, it is recommended that no neutral conductor is used. Where a neutral conductor is used, the measures detailed in 431.2.2 of IEC 60364-4-43:2008 shall apply		N/A
7.2.4	Control circuits		—
	Conductors of control circuits directly connected to the supply shall be protected against overcurrent in accordance with 7.2.3.	There is circuit breaker used for protecting the control transformer.	P
	Conductors of control circuits supplied by a transformer or DC supply shall be protected against overcurrent (see also 9.4.3.1.1):		—
	-In control circuits, connected to the protective bonding circuit, by an overcurrent protective device in the switched conductor	Meet requirements	P
	-In circuits, not connected to the protective bonding circuit: - Where all control circuits have the same current carrying capacity, by an overcurrent protective device in the switched conductor - Otherwise, by an overcurrent protective device in both, switched and common conductors of each control circuit		P
	Exception: Where a supply unit provides current limiting below the capacity of the conductors and the connected components, no overcurrent protective device is required		—
7.2.5	Overcurrent protection shall be provided for circuits feeding general purpose socket outlets		N/A
7.2.6	Unearthed conductors of lighting circuits shall be protected separately from other circuits.		N/A

IEC 60204-1			
Clause	Requirement - Test	Result - Remark	Verdict
7.2.7	Transformers shall be protected in accordance with the manufacturer's instructions and includes: -avoiding tripping due to transformer magnetizing inrush currents -avoiding a winding temperature rise in excess of the permitted value for the insulation class when there is a short circuit at the secondary terminals	The transformer has achieved the relative safety Certificate.	P
7.2.8	Location of overcurrent protective devices		—
	It shall be located at the point where a reduction in the cross sectional area of the conductors or another change reduces the current-carrying capacity of the conductors except:	All the location points are according to the instruction of the overcurrent protective device.	P
	-current carrying capacity of the conductors is at least equal to that of the load and -conductors between the point of reduction of current-carrying capacity and the position of the overcurrent protective device is ≤ 3 m and -the conductor is protected e.g. by an enclosure or duct.	These situations have been taken into consideration during the design of the electrical diagram.	P
7.2.9	Overcurrent protective devices		—
	The rated short-circuit breaking capacity Icn shall be at least equal to the prospective fault current at the point of installation. Additional currents other than from the supply (e.g. from motors, from power factor correction capacitors) shall be taken into consideration.	The overcurrent has the enough short-circuit breaking capacity Icn.	P
	Where fuses are provided as overcurrent protective devices, a type readily available in the country of use shall be selected, or arrangements shall be made for the supply of spare parts.	The type and brand of the fuse is international, detail see the electrical components list.	P
7.2.10	Rating and setting of overcurrent protective devices:		—
	Rated current of fuses or overcurrent setting of other protective devices selected as low as possible, but adequate for anticipated overcurrents.	The type of fuse and circuit breaker's setting is reasonable.	P
	The rated current of overcurrent protective device for conductors is determined by the current carrying capacity of the conductors to be protected in accordance with Cl. 12.4, D.2 and the maximum allowable interrupting time *t* in accordance with Clause D.3.	The coordination has been taken into account.	P
7.3	**Protection of motors against overheating**		—

IEC 60204-1			
Clause	Requirement - Test	Result - Remark	Verdict
7.3.1	Protection shall be provided for each motor rated at more than 0.5 kW.	All the motor have been protected.	P
	Exception: In applications where an automatic interruption of the motor operation is unacceptable (for example fire pumps), the means of detection shall give a warning signal to which the operator can respond.	The relative devices have no use in the machine.	—
	Automatic restarting prevented where this can cause a hazard		P
7.3.2	Protection achieved by overload protection device: • detection in each live conductor • switching off of all live conductors (not necessary to switch of neutral conductor)	The two means have been used in the machine.	P
	For special duty motors, appropriate protective devices are recommended		N/A
	For motors that cannot be overloaded, overload protection is not required.		N/A
7.3.3	Protection achieved by over-temperature protection device: Is recommended in situations where the cooling can be impaired (for example dusty environments)	No this situation.	N/A
7.4	Equipment shall be protected against abnormal temperatures that can result in a hazardous situation.	No these kind of circuits.	N/A
7.5	**Protection against the effects of supply interruption or voltage reduction and subsequent restoration**		—
	Where a supply interruption or a voltage reduction can cause a hazardous situation, damage to the machine, or to the work in progress, undervoltage protection is provided.		N/A
	Upon restoration of supply voltage, automatic or unexpected restarting of machine prevented.	The unexpected restarting is prevented by the machine.	N/A
	Undervoltage protection does initiate appropriate control responses to ensure necessary coordination of groups of machines working together	No this groups.	N/A
7.6	Motor overspeed protection shall be provided where overspeeding can occur and could possibly cause a hazardous situation.		N/A

IEC 60204-1			
Clause	Requirement - Test	Result - Remark	Verdict
7.7	In addition to providing overcurrent protection for automatic disconnection as described in 6.3, earth fault/residual current protection can be provided to reduce damage to equipment due to earth fault currents less than the detection level of the overcurrent protection.		N/A
7.8	Phase sequence protection shall be provided, where an incorrect phase sequence of the supply voltage can cause a hazardous situation or damage to the machine.		N/A
7.9	Surge protective devices (SPDs) can be provided to protect against the effects of overvoltages due to lightning or to switching surges.		N/A
7.10	The short-circuit current rating of the electrical equipment shall be determined by the application of design rules or by calculation or by test.		P
8	**EQUIPOTENTIAL BONDING**		—
8.1	**This Clause 8 provides requirements for protective bonding and functional bonding.**		—
8.2	**Protective bonding circuit**		—
8.2.1	All parts of the protective bonding circuit shall be so designed that they are capable of withstanding the highest thermal and mechanical stresses	copper	P
	Protective conductors which does not form part of a cable shall not be less than:		—
	-2.5 mm^2 Cu or 16 mm^2 Al if protection against mechanical damage is provided		P
	-4 mm^2 Cu or 16 mm^2 Al if protection against mechanical damage is not provided		P
	Exposed conductive parts of equipment in accordance with 6.3.2.3 (Protection by electrical separation) shall not be connected to the protective bonding circuit.		N/A
	Small parts and other conductive parts that do not constitute a hazard need not to be earthed		N/A
8.2.2	Protective conductors		—
	Protective conductors shall be identified in accordance with 13.2.2.		P
	Copper conductors are preferred.		P

IEC 60204-1			
Clause	Requirement - Test	Result - Remark	Verdict
	Where other material is used, its electrical resistance per unit length shall not exceed that of the allowable copper conductor and such conductors shall be not less than 16 mm^2 in cross-sectional area.		N/A
	Metal enclosures or frames or mounting plates may be used as protective conductors if they satisfy the following three requirements: -protection against mechanical, chemical or electrochemical deterioration -compliant with 543.1 of IEC 60364-5-54: -permit the connection of other protective conductors where foreseen	See the 5.2.	P
	The cross-section of protective conductors shall be calculated according to 543.1.2 of IEC 60364-5-54, or selected in accordance with Table 1.		P
	Each protective conductor shall: -be part of a multicore cable, or; -be in a common enclosure with the line conductor, or; -have a cross-sectional area of at least; - 2.5 mm^2 Cu or 16 mm^2 Al with protection against mechanical damage - 4 mm^2 Cu or 16 mm^2 Al without protection against mechanical damage		P
	A protective conductor not forming part of a cable is considered to be mechanically protected if it is installed in a conduit, trunking or protected in a similar way.		P
	The following parts shall be connected to the protective bonding circuit but shall not be used as protective conductors: -conductive structural parts of the machine; -metal ducts of flexible or rigid construction; -metallic cable sheaths or armouring; -metallic pipes containing flammable materials such as gases, liquids, powder. -flexible or pliable metal conduits; -constructional parts subject to mechanical stress in normal service; -• flexible metal parts; support wires; cable trays and cable ladders.		P
8.2.3	Continuity of the protective bonding circuit		—
	Where a part is removed the protective bonding circuit for the remaining parts isn't interrupted.	Every part in the machine is separated.	P

IEC 60204-1			
Clause	Requirement - Test	Result - Remark	Verdict
	Current-carrying capacity of connection and bonding points not impaired by mechanical, chemical, or electrochemical influences (e.g. electrolytic corrosion on aluminium parts)	All the connection uses the copper conductor.	P
	Where the electrical equipment is mounted on lids, doors, or cover plates, continuity of the protective bonding circuit shall be ensured. The use of a protective conductor (see 8.2.2) is recommended.	These lid and door in the machine are well connected with the protective conductor.	P
	For cables that are exposed to damage (for example flexible trailing cables) the continuity of the protective conductors are ensured by appropriate measures (for example monitoring).		P
	Where the continuity can be interrupted, a first make last break contact is required.		N/A
8.2.4	Protective conductor connecting points are not intended to attach appliances or parts.		P
	Each connecting point shall be marked or labelled as such using the symbol IEC 60417-5019 or the letters PE or by use of bicolour GREEN / YELLOW	These labels are provided in the machine.	P
8.2.5	Mobile machines with on-board power supplies: The protective bonding system is connected to a single protective bonding terminal. This protective bonding terminal is the connection point for a possible additional external incoming power supply		N/A
8.2.6	**Additional requirements for electrical equipment having earth leakage currents higher than 10 mA**		—
	Where electrical equipment has an earth leakage current greater than 10 mA AC or DC the associated protective bonding circuit shall satisfy one of the following:		—
	a)the protective conductor is completely enclosed or otherwise protected		N/A
	b)the protective conductor has a cross-sectional area of at least 10 mm^2 Cu or 16 mm^2 Al		N/A
	c)a second protective conductor of at least the same cross-sectional area is provided		N/A
	d)the supply is automatically disconnected in case of loss of continuity of the protective conductor		N/A

IEC 60204-1			
Clause	Requirement - Test	Result - Remark	Verdict
	e)where a plug-socket combination is used, an industrial connector in accordance with IEC 60309 series is provided		N/A
	A statement shall be given in the instructions for installation that the equipment shall be installed as described in this 8.2.6.		N/A
8.3	Measures to restrict the effects of high leakage current can be taken as described		N/A
8.4	If functional bonding is used, the connecting points should be marked with symbol IEC 60417-5020 		N/A
9	**CONTROL CIRCUITS AND CONTROL FUNCTIONS**		—
9.1.	**Control circuit**		—
9.1.1	Where control circuits are supplied from an AC source, transformers having separate windings shall be used to separate the power supply from the control supply.	Control transformer is used.	P
	Examples include: control transformers acc. to IEC 61558-2-2, SMPS acc. to IEC 61558-2-16 power supplies acc. to IEC 61204-7		P
	Where several transformers are used, it is recommended that the secondary voltages are in phase.		N/A
	Exception: Transformers or switch mode power supply units fitted with transformers are not mandatory for machines with a single motor starter and/or a maximum of two control devices		—
	Where DC control circuits derived from an AC supply are connected to the protective bonding, they shall be supplied from a separate winding		P
9.1.2	The nominal voltage of control circuits should preferably not exceed -230 V @ 50 Hz -277 V @ 60 Hz -220 V @ DC		P
9.1.3	Control circuits are provided with overcurrent protection in accordance with 7.2.4 and 7.2.10.	The overcurrent protection is provided in the machine.	P
9.2.	**Control functions**		—

IEC 60204-1			
Clause	Requirement - Test	Result - Remark	Verdict
9.2.2	Categories of stop functions are stop category 0, 1, 2		P
9.2.3	Operation		—
9.2.3.1	Where a machine has more than one control station, measures shall be provided to ensure that initiation of commands from different control stations do not lead to a hazardous situation.	Use the selective switch with lock.	P
9.2.3.2	Start functions shall operate by energizing the relevant circuit.		P
	Start of an operation shall be possible only when all of the relevant safety functions and/or protective measures are in place and are operational.	Only reset the safety relay and emergency stop, the machine could start.	P
	Where safety functions and/or protective measures cannot be applied for certain operations, manual control of such operations are by hold-to-run controls, together with enabling devices, as appropriate.	No this situation.	P
	In the case of machines requiring the use of more than one control station to initiate a start, each of these control stations shall have a separate manually actuated start control device. The conditions to initiate a start are: - all required conditions for machine operation shall be met and - all start control devices shall be in the released (off) position, then - all start control devices have to be actuated concurrently (see 3.1.7).		P
9.2.3.3	Stop category 0 and/or stop category 1 and/or stop category 2 stop functions are provided as indicated by the risk assessment and the functional requirements of the machine (see 4.1).		P
	Stop functions shall override related start functions		P
	Where more than one control station is provided, stop commands from any control station is effective when required by the risk assessment of the machine.	This stop command form any control station is effective.	P
9.2.3.4	Emergency operations (emergency stop, emergency switching off)		—
9.2.3.4.1	Emergency stop or emergency switching off commands shall be sustained until it is reset.		P
	This reset shall be possible only by a manual action at that location where the command has been initiated.		P

IEC 60204-1			
Clause	Requirement - Test	Result - Remark	Verdict
	The reset of the command shall not restart the machinery but only permit restarting.		P
	It shall not be possible to restart the machinery until all emergency stop commands are reset.		P
	It shall not be possible to reenergize the machinery until all emergency switching off commands are reset.		P
9.2.3.4.2	The emergency stop does function either as a stop category 0 or as a stop category 1.		P
	- it shall override all other functions and operations in all modes - it shall stop the hazardous motion as quickly as practicable without creating other hazards - a reset shall not initiate a restart		P
9.2.3.4.3	Emergency switching off should be provided where: - Protection against direct contact is achieved only by placing out of reach or by obstacles (see 6.2.6) or - there is the possibility of other hazards or damage caused by electricity		P
	Emergency switching off is accomplished by electromechanical switching devices, effecting a stop category 0 of machine actuators connected to this incoming supply		P
9.2.3.5	Operating modes		—
	Where machinery uses several control or operating modes requiring different protective measures and having a different impact on safety, it shall be fitted with a mode selector which can be locked in each position		P
	Another selection method can be used (for example an access code)		P
	Mode selection by itself does not initiate machine operation. A separate actuation of the start control has to be stated by the operator.		P
	Indication of the selected operating mode shall be provided (e.g. the position of a mode selector, the provision of an indicating light, a visual display indication)		P

IEC 60204-1			
Clause	Requirement - Test	Result - Remark	Verdict
9.2.3.6	Movement or action that can result in a hazardous situation shall be monitored by providing, for example, overtravel limiters, motor overspeed detection, mechanical overload detection or anti-collision devices		N/A
9.2.3.7	Hold-to-run controls shall require continuous actuation of the control device(s) to achieve operation		P
9.2.3.8	Two-hand controls shall be one of the following types and have the following features		N/A
	Type I: this type requires: - the provision of two control devices and their concurrent actuation by both hands; - continuous concurrent actuation during the hazardous situation; - machine operation shall cease upon the release		N/A
	Type II: a Type I control requiring the release of both control devices before machine operation can be reinitiated		N/A
	Type III: a Type II control requiring concurrent actuation of the control devices as follows: – it shall be necessary to actuate the control devices within a certain time limit of each other, not exceeding 0.5 s – where this time limit is exceeded, both control devices shall be released before machine operation can be initiated		N/A
9.2.3.9	Enabling control shall be so arranged as to minimize the possibility of defeating, for example by requiring the de-activation of the enabling control device before machine operation may be reinitiated		P
9.2.3.10	Combined start and stop controls: Push-buttons etc. that alternately initiate and stop motion shall only be provided for functions, which cannot result in a hazardous situation.		N/A
9.2.4	Cableless control system		—

IEC 60204-1			
Clause	Requirement - Test	Result - Remark	Verdict
9.2.4.1	The CCS shall have functionality and a response time suitable for the application based on the risk assessment.	No cableless control	N/A
9.2.4.2	The ability of a CCS to control a machine shall be automatically monitored, either continuously or at suitable intervals.		N/A
	If the communication signal has degraded (e.g., reduced signal level, low battery power) a warning shall be given		N/A
	When the ability to control a machine has been lost, an automatic stop of the machine shall be initiated.		N/A
	Its restoration shall not restart the machine.		N/A
9.2.4.3	Measures shall be taken to prevent the machine from responding to signals other than those from the intended operator control station(s).		N/A
	Cableless operator control station(s) shall only control the intended machine(s) and shall affect only the intended machine functions.		N/A
9.2.4.4	When more than one cableless operator control station is used, then:		—
	-only one control station shall be enabled at a time except as necessary for the operation		N/A
	- transfer of control shall require a deliberate manual action at the station having control		N/A
	- transfer shall only be possible if both stations are in the same mode		N/A
	- a transfer shall not change the mode of operation or function		N/A
	- on the station that has control, a visual indication shall indicate this		N/A
9.2.4.5	Portable cableless operator control stations shall be provided with means to prevent unauthorized use		N/A
	Each machine should have an indication when it is under cableless control		N/A
	When possible to be connected to several machines, means shall be provided on the portable device to select		N/A
	Selecting a machine shall not initiate control commands.		N/A

IEC 60204-1			
Clause	Requirement - Test	Result - Remark	Verdict
9.2.4.6	A deliberate disabling shall meet the requirements of 9.2.4.2.		N/A
	Where disabling without interrupting machine operation is necessary, appropriate means shall be provided to transfer control		N/A
9.2.4.7	Emergency stop devices on portable cableless operator control stations shall not be the sole means of initiating an emergency stop		N/A
	Confusion between active and inactive emergency stop devices shall be avoided		N/A
9.2.4.8	Restarting of a cableless control shall not result in a reset of an emergency stop condition		N/A
	The instructions shall state that a reset shall only be performed when it can be seen that the reason has been cleared		N/A
9.3	**Protective interlocks**		—
9.3.1	The reclosing or resetting of an interlocking safeguard does not initiate hazardous machine operation	Reset button is provided.	P
9.3.2	Where an operating limit (for example speed, pressure, position) can be exceeded leading to a hazardous situation, means shall be provided to detect when a predetermined limit(s) is exceeded and initiate an appropriate control action	Door lock switch	P
9.3.3	The correct operation of auxiliary functions shall be checked by appropriate devices		N/A
	Where the non-operation of a device can cause a hazard, appropriate interlocking shall be provided		N/A
9.3.4	Interlocks between different operations and for contrary motions shall be provided, if these operations can lead to hazardous situations		N/A
9.3.5	Where braking of a motor is accomplished by current reversal, measures shall prevent the motor starting in the opposite direction at the end of braking where that reversal can cause a hazardous situation or damage to the machine or to thework in progress		N/A
	For this purpose, a device operating exclusively as a function of time is not permitted		N/A
	Control circuits shall be so arranged that rotation of a motor shaft, for example manually, does not result in a hazardous situation	This is requirement has been complied with.	P

IEC 60204-1			
Clause	Requirement - Test	Result - Remark	Verdict
9.3.6	Where it is necessary to suspend safety functions and/or protective measures, the control or operating mode selector shall simultaneously:		—
	- disable all other operating (control) modes		N/A
	- permit operation only by the use of a hold-to-run device or by a similar control device positioned so as to permit sight of the hazardous elements		N/A
	- prevent any operation of hazardous functions by voluntary or involuntary action on the machine's sensors		N/A
	If these four conditions cannot be fulfilled, the mode selector shall activate other protective measures to ensure a safe intervention zone. In addition, the operator shall be able to control operation of the parts he is working on from the adjustment point.		N/A
9.4	Control functions in the event of failure		—
9.4.1	The electrical control system(s) shall have an appropriate performance that has been determined from the risk assessment of the machine		P
	The requirements for safety-related control functions of IEC 62061 and/or ISO 13849-1, ISO 13849-2 shall apply		P
	Where memory retention is achieved for example, by battery power, measures shall be taken to prevent hazardous situations arising from failure, undervoltage or removal of the battery		P
	Means shall be provided to prevent unauthorized or inadvertent memory alteration by, for example, requiring the use of a key, access code or tool		P
9.4.2	Measures to minimize risk in the event of failure		—
9.4.2.2	Use of proven circuit techniques and components (see examples)		P
9.4.2.3	Provisions of partial or complete redundancy		P
9.4.2.4	Provision of diversity (see examples)		P
9.4.2.5	Provision for functional tests		P
9.4.3	Protection against malfunction of control circuits		—
9.4.3.1.1	Measures shall be provided to reduce the probability that insulation faults on any control circuit can cause malfunction		P

IEC 60204-1			
Clause	Requirement - Test	Result - Remark	Verdict
9.4.3.1.2	Method a) – Earthed control circuits fed by transformers		P
	The common conductor shall be connected to the protective bonding circuit at the point of supply.		P
	All control elements are to be inserted on the other side of the components		P
9.4.3.1.3	Method b) – Non-earthed control circuits fed by transformers shall either		N/A
	1) have 2-pole control switches that operate on both conductors; or		N/A
	2) be provided with a device that interrupts the circuit automatically in the event of an earth fault; or		N/A
	3) where 2) above would increase the risk, it can be sufficient to provide an insulation monitoring device hat will initiate an acoustic and optical signal		N/A
9.4.3.1.4	Method c) – Control circuits fed by transformer with an earthed centre-tap winding shall have overcurrent protective devices that break both the conductors		N/A
	The control switches shall be 2-pole types that operate on both conductors		N/A
9.4.3.1.5	Method d) – Control circuits not fed by a transformer are only allowed for machines with a maximum of one motor starter and/or maximum of two control devices, in accordance with 9.1.1		N/A
	Possible cases are:		—
	1) directly connected to an earthed supply system (TN- or TT-system)		N/A
	If powered between two lines, multi-pole control switches are required		N/A
	2) directly connected to a supply system that is not earthed or is earthed through a high impedance (IT-system)		N/A
	A device shall be provided that interrupts the circuit automatically in the event of an earth fault		N/A
9.4.3.2	Where the loss of memory due to a power failure can result in a hazardous situation, appropriate measures shall be taken		N/A

IEC 60204-1			
Clause	Requirement - Test	Result - Remark	Verdict
9.4.3.3	Where the loss of continuity of control circuits depending upon sliding contacts can result in a hazard, appropriate measures shall be taken		N/A
10	**OPERATOR INTERFACE AND MACHINE-MOUNTED CONTROL DEVICES**		—
10.1.1	Control devices for operator interface shall, as far as is practicable, be selected, mounted, and identified or coded in accordance with IEC 61310 series	Meet requirements	P
10.1.2	As far as is practicable, machine-mounted control devices shall be:		—
	- readily accessible for service and maintenance		P
	- mounted in such a manner as to minimize the possibility of damage from activities such as material handling		P
	The actuators of hand-operated control devices are selected and installed so that:		—
	- they are not less than 0,6 m above the servicing level and are within easy reach of the normal working position of the operator		P
	- the operator is not placed in a hazardous situation when operating them		P
	The actuators of foot-operated control devices are selected and installed so that:		—
	- they are within easy reach of the normal working position of the operator		N/A
	- the operator is not placed in a hazardous situation when operating them		N/A
10.1.3	The degree of protection (IP rating in accordance with IEC 60529) together with other appropriate measures shall provide protection against:		P
	– the effects of liquids, vapours, or gases found in the physical environment or used on the machine		P
	– the ingress of contaminants (for example swarf, dust, particulate matter)		P
	The operator interface control devices shall have a minimum degree of protection against contact with live parts of IPXXD (see IEC 60529)		P
10.1.4	Position sensors (for example position switches, proximity switches) are so arranged that they will not be damaged in the event of overtravel		P

IEC 60204-1			
Clause	Requirement - Test	Result - Remark	Verdict
	Position sensors in circuits with safety-related control functions shall have direct opening action (see IEC 60947-5-1) or shall provide similar reliability (see 9.4.2)	It has been complied with this requirement.	P
10.1.5	Portable and pendant operator control stations and their control devices are so selected and arranged as to minimize the possibility of machine operations caused by inadvertent actuation, shocks and vibrations	No portable operator station.	N/A
10.2	**Actuators**		—
10.2.1	Actuators shall be colour-coded as follows:		—
	The colours for START/ON actuators should be WHITE, GREY, BLACK or GREEN with a preference for WHITE. RED shall not be used		P
	The colour RED shall be used for emergency stop and emergency switching off actuators		P
	If a background exists, it shall be coloured YELLOW		P
	The colours for STOP/OFF actuators should be BLACK, GREY, or WHITE with a preference for BLACK. GREEN shall not be used. RED is permitted		P
	WHITE, GREY, or BLACK are the preferred colours for actuators that alternately act as START/ON and STOP/OFF actuators. The colours RED, YELLOW, or GREEN shall not be used		P
	The same is applicable for “hold-to-run” actuators		P
	Reset actuators shall be BLUE, WHITE, GREY, or BLACK. Where they also act as a STOP/OFF actuator, the colours WHITE, GREY, or BLACK are preferred with the main preference being for BLACK. GREEN shall not be used.		P
	The colour YELLOW is reserved for use in abnormal conditions		P
	Where the same colours are used for various functions, a supplementary means of coding shall be used for the identification		P
10.2.2	Recommended markings for actuators are given in table 2 and 3		P
10.3	**Indicator lights and displays**		—

IEC 60204-1			
Clause	Requirement - Test	Result - Remark	Verdict
10.3.1	Indicator lights and displays shall be selected and installed in such a manner as to be visible from the normal position of the operator (see also IEC 61310-1).		P
	Circuits used for visual or audible devices used to warn persons of an impending hazardous event shall be fitted with facilities to check the operability of these devices		P
10.3.2	Indicator lights should be colour-coded with respect to the condition (status) of the machine in accordance with Table 4.		P
	Indicating towers on machines have the applicable colours in the following order from the top down; RED, YELLOW, BLUE, GREEN and WHITE.		P
10.3.3	For further distinction or information and especially to give additional emphasis, flashing lights and displays can be provided		P
	Where flashing lights or displays are used to provide higher priority information, additional acoustic warnings should be considered		P
10.4	illuminated push-button actuators shall be colour-coded in accordance with Tables 2 and 4. Where there is difficulty in assigning an appropriate colour, WHITE is used.		P
	The colour RED for the emergency stop actuator shall not depend on the illumination of its light.		P
10.5	Devices having a **rotational member**, such as potentiometers and selector switches, shall have means of prevention of rotation of the stationary member. Friction alone isn't considered sufficient.		P
10.6	Actuators used to initiate a start function or the movement of machine elements shall be constructed and mounted so as to minimize inadvertent operation		P
10.7	**Emergency stop devices**		—
10.7.1	Devices for emergency stop are readily accessible	Meet requirements	P
	Emergency stop devices shall be provided at each location where the initiation of an emergency stop can be required		P

IEC 60204-1			
Clause	Requirement - Test	Result - Remark	Verdict
	In circumstances where confusion can occur between active and inactive emergency stop devices caused by disabling the operator control station, means (for example, information for use) are provided to minimise confusion.		P
10.7.2	The types of device for emergency stop include, but are not limited to: – a push-button device for actuation by the palm or the fist (e.g. mushroom) – a pull-cord operated switch – a pedal-operated switch without mechanical guard		P
	The devices shall be in accordance with IEC 60947-5-5.		P
10.7.3	Where a stop category 0 is suitable, the supply disconnecting device may serve the function of emergency stop where: – it is readily accessible to the operator; and – it is of the type described in 5.3.2 a), b), c), or d)		P
	Where intended for emergency use, the supply disconnecting device shall meet the colour requirements of 10.2.1		P
10.8	**Emergency switching off devices**		—
10.8.1	Such devices shall be located as necessary for the given application.		N/A
	Means are provided, where necessary, to avoid confusion between these devices.		N/A
10.8.2	The types of device for emergency switching off include: - a push-button operated switch with a palm or mushroom head type of actuator - a pull-cord operated switch		N/A
	The devices shall have direct opening action		N/A
10.8.3	Where the supply disconnecting device is to be locally operated for emergency switching off, it shall be readily accessible and shall meet the colour requirements of 10.2.1		N/A
10.9	**Enabling control device**		—
	Enabling control devices shall be selected and arranged so as to minimize the possibility of defeating		P

IEC 60204-1			
Clause	Requirement - Test	Result - Remark	Verdict
	They shall be designed in accordance with ergonomic principles		P
	Functions of two-position types: - position 1: off-function of the switch (actuator is not operated); - position 2: enabling function (actuator is operated)		P
	Functions of three-position types: – position 1: off-function of the switch (actuator is not operated) – position 2: enabling function (actuator is operated in its mid position) – position 3: off-function (actuator is operated past its mid position) – when returning from position 3 to position 2, the enabling function is not activated		N/A
11	**CONTROLGEAR: LOCATION, MOUNTING AND ENCLOSURES**		—
11.2.1	All items of controlgear (inclusively terminals that are not part of controlgear components or devices) are placed and oriented so that they can be identified without moving them or the wiring		P
	For items that require checking for correct operation or that are liable to need replacement, those actions should be possible without dismantling other equipment or parts of the machine (except opening doors or removing covers, barriers or obstacles)		P
	All controlgear are mounted so as to facilitate its operation and maintenance		P
	Necessary tools to adjust, maintain, or remove a device are supplied		P
	Where access is required for regular maintenance or adjustment, the relevant devices shall be located between 0.4 m and 2.0 m above the servicing level		P
	Recommendation, that terminals be least 0.2 m above the servicing level and so placed that conductors and cables can be easily connected		P
	Only operating, indicating, measuring, and cooling devices are mounted on doors or on normally removable access covers of enclosures	The components mounted on the doors are used as operating, indicating.	P

IEC 60204-1			
Clause	Requirement - Test	Result - Remark	Verdict
	Where connected through plug-in arrangements, their association shall be made clear by type (shape), marking or reference designation		P
	Plug-in devices that are handled during normal operation shall be provided with non-interchangeable features		N/A
	Plug/socket combinations that are handled during normal operation are unobstructedly accessible.		N/A
	Test points for connection of test equipment shall be: – mounted to provide unobstructed access – clearly identified to correspond with the documentation – adequately insulated – sufficiently spaced		N/A
11.2.2	Physical separation or grouping		—
	Non-electrical parts and devices, not directly associated with the electrical equipment, shall not be located within enclosures containing controlgear	Non-electrical parts are mounted outside the enclosure.	P
	Devices such as solenoid valves should be separated from the other electrical equipment (for example in a separate compartment)	Solenoid and relative device are separated from the electrical equipments.	P
	Control devices mounted in the same location and connected to the supply voltage, or to both supply and control voltages, should be grouped separately from those connected only to the control voltages		P
	Terminals shall be separated into groups for: a) power circuits b) associated control circuits c)other control circuits, fed from external sources (for example for interlocking)		P
	The clearances and creepage distances specified by the supplier shall be maintained, taking into account the external influences or conditions of the physical environment.		P
11.2.3	The temperature rise inside electrical equipment enclosures shall not exceed the ambient temperature specified by the component manufacturers		P
	Heat generating components (for example heat sinks, power resistors) are located so, that the temperature of each component in the vicinity remains within the permitted limit		P

IEC 60204-1			
Clause	Requirement - Test	Result - Remark	Verdict
11.3	**Degrees of protection**		—
	The protection of controlgear against ingress of solid foreign objects and of liquids shall be adequate taking into account the external influences under which the machine is intended to operate and shall be sufficient against dust, coolants, lubricants and swarf		P
	Enclosures of controlgear provide a degree of protection of at least IP22 (see IEC 60529)		P
	Exception, where: - an electrical operating area provides an appropriate degree of protection - removable collectors on conductor wire or conductor bar systems are used and the measures of 12.7.1 are applied		P
11.4	**Enclosures, doors and openings**		—
	Enclosures shall be constructed using materials capable of withstanding the mechanical, electrical and thermal stresses as well as the effects of humidity and other environmental factors that are likely to be encountered in normal service	The enclosure has been complied with these requirements.	P
	Fasteners used to secure doors and covers should be of the captive type		P
	Windows of enclosures shall be of a material suitable to withstand expected mechanical stress and chemical attack		P
	It is recommended that enclosure doors having vertical hinges be not wider than 0,9 m, with an angle of opening of at least 95°	The two requirements have been complied with.	P
	Joints or gaskets of doors, lids, etc. shall withstand the chemical effects of the aggressive liquids, vapours, or gases used on the machine.		P
	They shall: – be securely attached – not deteriorate due to removal or replacement of the door		P
	Openings in enclosures (for example, for cable access), including those towards the floor or foundation or to other parts of the machine shall be equipped with means to ensure the degree of protection specified for the equipment.		P

IEC 60204-1			
Clause	Requirement - Test	Result - Remark	Verdict
	A suitable opening may be provided in the base of enclosures within the machine so that moisture due to condensation can drain away		P
	Openings for cable entries shall be easily re-opened on site		P
	There shall be no opening between enclosures containing electrical equipment and compartments containing coolant, lubricating or hydraulic fluids, or those into which oil, other liquids, or dust can penetrate.		P
	Holes in an enclosure for mounting shall not impair the required protection.		P
	Equipment that, in normal or abnormal operation, can attain a surface temperature sufficient to cause a risk of fire or harmful effect to an enclosure material shall: - be located within an enclosure that will withstand, such temperatures; and - be located at a sufficient distance from adjacent equipment allowing safe dissipation of heat (see also 11.2.3); or - be otherwise screened by material that can withstand to the harmful effect.		N/A
11.5	**Access to electrical equipment**		—
	Doors in gangways for access to electrical operating areas shall: - be at least 0.7 m wide and 2.0 m high - open outwards - have a means (for example panic bolts) to allow opening from the inside without the use of a key or tool		N/A
12	**CONDUCTORS AND CABLES**		—
12.1	Conductors and cables shall be selected so as to be suitable for the operating conditions and external Influences that can exist	The copper conductors have been provided.	P
	These requirements do not apply to the integral wiring of assemblies, subassemblies, and devices that are manufactured and tested in accordance with their relevant IEC standard (for example IEC 61800 series).		—
12.2	Conductors should be of copper. Where aluminium conductors are used, the cross-sectional area shall be at least 16 mm^2.		P

IEC 60204-1			
Clause	Requirement - Test	Result - Remark	Verdict
	The cross-sectional area of conductors should not be less than as shown in Table 5		P
	Smaller cross-sectional areas or other constructions than shown in Table 5 may be used, provided adequate mechanical strength is achieved by other means		P
	Class 1 and class 2 conductors are primarily intended for use between rigid, non-moving parts where vibration is not likely to cause damage		P
	All conductors that are subject to frequent movement should have flexible stranding of class 5 or class 6.		P
12.3	Where the insulation of conductors and cables can constitute hazards due for example to the propagation of a fire or the emission of toxic or corrosive fumes adequate means are provided. Special attention is given to the integrity of a circuit having a safety-related function		P
	The insulation of cables and conductors used, shall be suitable for a test voltage:		—
	- not less than 2 000 V AC for a duration of 5 min for operation at voltages higher than 50 V AC or 120 V DC, or		P
	- not less than 500 V AC for a duration of 5 min for PELV circuits (see IEC 60364-4-41, class III equipment).		P
	The insulation shall be such that it cannot be damaged in operation or during laying, especially for cables pulled into ducts.		P
12.4	Current-carrying capacity in normal service in accordance with table 6. Or in accordance with suppliers recommendation.		P
12.5	The voltage drop from the point of supply to the load in any power circuit cable shall not exceed 5 % of the nominal voltage under normal operating conditions.		P
	In control circuits, the voltage drop shall not reduce the voltage at any device below the manufacturer's specification for that device, taking into account inrush currents.		P
12.6	**Flexible cables**		—

IEC 60204-1			
Clause	Requirement - Test	Result - Remark	Verdict
12.6.1	Flexible cables shall have Class 5 or Class 6 conductors		P
	Cables that are subjected to severe duties shall be of adequate construction to protect against: - abrasion due to mechanical handling and dragging across rough surfaces - kinking due to operation without guides - stress resulting from guide rollers and forced guiding, being wound and re-wound on cable drums		P
12.6.2	The tensile stress applied to copper conductors shall not exceed 15 N/mm^2 of cross-sectional area Or special measures are taken to withstand the applied stress		P
	For material other than copper the applied stress shall be within the cable manufacturer's specification		P
12.6.3	For cables of circular cross-sectional area installed on drums, the maximum current should be derated in accordance with Table 7		P
12.7	**Conductor wires, conductor bars and slip-ring assemblies**		—
12.7.1	During normal access to the machine, **protection** to conductor wires, conductor bars and slip-ring assemblies shall be achieved by the application of one of the following protective measures:	The live parts are protected and the enclosure has the IP 32	P
	- protection by partial insulation of live parts, or where this is not practicable		P
	- protection by enclosures or barriers of at least IP2X or IPXXB		P
	Horizontal top surfaces of barriers or enclosures that are readily accessible shall provide a degree of protection of at least IP4X or IPXXD		P
	Where the required degree of protection is not achieved, protection by placing live parts out of reach in combination with emergency switching off in accordance with 9.2.5.4.3 shall be applied		N/A
	Conductor wires and conductor bars shall be so placed and/or protected as to:		—
	-prevent contact, especially for unprotected conductor wires and conductor bars, with conductive items such as the cords of pull-cord switches, strain-relief devices and drive chains	The conductor wires have been well placed.	P

IEC 60204-1			
Clause	Requirement - Test	Result - Remark	Verdict
	- prevent damage from a swinging load		P
12.7.2	Protective conductor circuit (PE) and the neutral conductor (N) each use a separate conductor wire, conductor bar or slip-ring	They are separated.	P
	The continuity of the protective conductor circuit using sliding contacts shall be ensured by taking appropriate measures (for example, duplication of the current collector, continuity monitoring)	No sliding contacts used in the machine.	N/A
12.7.3	Protective conductor current collectors shall have a shape or construction so that they are not interchangeable with the other current collectors. Such current collectors shall be of the sliding contact type		N/A
12.7.4	Removable current collectors with disconnector function: The protective conductor circuit interrupts after and reconnects before any live conductor		N/A
12.7.5	Clearances in air between conductors and adjacent systems shall be suitable for at least a rated impulse voltage of an overvoltage category III in accordance with IEC 60664-1		N/A
12.7.6	Creepage distances between conductors and adjacent systems shall be suitable suitable for operation in the intended environment, e.g. open air, inside buildings, protected by enclosures		P
	In abnormally dusty, moist or corrosive environments, the following creepage distance requirements apply:		P
	- unprotected conductor wires, conductor bars, and slip-ring assemblies: 60 mm		P
	- enclosed conductor wires, insulated multipole conductor bars and insulated individual conductor bars: 30 mm		P
12.7.7	Conductor system divided into isolated sections: suitable design measures shall be employed to prevent the energization of adjacent sections by the current collectors themselves		P
12.7.8	Conductor wires, conductor bars and slip-ring assemblies in power circuits shall be grouped separately from those in control circuits	The conductor wires could reach the requirements.	P
	They shall be capable of withstanding, without damage, the mechanical forces and thermal effects of short-circuit currents		P

IEC 60204-1			
Clause	Requirement - Test	Result - Remark	Verdict
	Removable covers cannot be opened by one person without the aid of a tool		P
	Where common metal enclosures are used, the individual sections shall be bonded together and connected to the protective bonding circuit		P
	Conductor bar ducts that can be subject to accumulation of liquid shall have drainage facilities		P
13	**WIRING PRACTICES**		—
13.1	Connections and routing		—
13.1.1	All connections shall be secured against accidental loosening		P
	The means of connection shall be suitable for the cross-sectional areas and nature of the conductors being terminated		P
	No connection of two or more conductors to one terminal, unless the terminal is designed for it		P
	No soldered connections to terminals unless they are suitable for it		P
	Terminals on terminal blocks are plainly marked or labelled corresponding with the diagrams		P
	Installations of flexible conduits and cables are such that liquids drain away from the fittings		P
	Retaining means for conductor strand and shields provided (no soldering for that purpose)		P
	Indentification tags shall be legible, permanent, and appropriate for the physical environment		P
	Terminal blocks mounted and wired so that the wiring does not cross over the terminals		P
13.1.2	Conductors and cables shall be run from terminal to terminal without splices or joints		P
	Connections using plug/socket combinations with suitable protection against accidental disconnection are not considered to be splices or joints for the purpose of this subclause		P
	Exceptions are possible as described		P

IEC 60204-1			
Clause	Requirement - Test	Result - Remark	Verdict
	Terminations of cables shall be adequately supported to prevent mechanical stresses at the terminations of the conductors		P
	Protective conductor shall be placed close to the associated live conductors in order to decrease the impedance of the loop		P
13.1.3	Conductors for circuits that operate at different voltages are separated by suitable barriers, or are insulated for the highest voltage that occurs within the same duct		P
13.1.4	Conductors of AC circuits installed in ferromagnetic enclosures shall be arranged so that all conductors of each circuit, including the protective conductor of each circuit, are contained in the same enclosure		P
	Single-core cables armoured with steel wire or steel tape should not be used for AC circuits		P
13.1.5	The cable between the pick-up and the pick-up converter of an inductive power supply system shall be:		—
	- as short as practicable		P
	- adequately protected against mechanical damage		P
13.2.1	Each conductor shall be identifiable at each termination in accordance with the technical documentation		P
13.2.2	When identification of the protective conductor is by colour alone, the bicolour combination GREEN-AND-YELLOW shall be used throughout the length of the conductor		P
	Where the protective conductor can be easily identified colour coding throughout its length is not necessary, but the ends or accessible locations are clearly identified by the graphical symbol or by the bicolour combination GREEN-AND-YELLOW		P
	Exception: Protective bonding conductors may be marked with the letters PB and/or the symbol IEC 60417-5021		P
13.2.3	Where a neutral conductor is identified by colour alone, the colour shall be BLUE (preferably light blue)		P
	In this case that colour shall not be used for identifying any other conductor where confusion is possible		P

IEC 60204-1			
Clause	Requirement - Test	Result - Remark	Verdict
	Bare conductors used as neutral conductors shall have at minimum a stripe in LIGHT BLUE 15 mm to 100 mm wide in each compartment or unit and at each accessible location		P
13.2.4	Where colour-coding is used, BLACK, BROWN, RED, ORANGE, YELLOW, GREEN, BLUE (including LIGHT BLUE), VIOLET, GREY, WHITE, PINK, TURQUOISE may be used		P
	GREEN and YELLOW should not be used where there is a possibility of confusion with the bicolour combination GREEN-AND-YELLOW		P
13.3	**Wiring inside enclosures**		—
	Conductors inside enclosures shall be supported where necessary		P
	Non-metallic supports shall be made with a flame-retardant insulating material (see IEC 60332 series)		P
	Connections to devices mounted on doors or to other movable parts shall be made using flexible conductors in accordance with 12.2 and 12.6.		P
	Conductors and cables that do not run in ducts shall be adequately supported		P
13.4	**Wiring outside enclosures**		—
13.4.1	Conductors of a circuit shall not be distributed over different multi-core cables, conduits, etc.		P
13.4.2	Conductors and their connections external to the electrical equipment shall be **placed in suitable ducts** (see cl.13.5) Exceptions: b) Cables with special suitable protection. c) Position switches or proximity switches supplied with a dedicated cable which is sufficiently short		P
13.4.3	Connections to moving parts shall take into account the foreseeable frequency of movement and shall be made using conductors in accordance with 12.2 and 12.6		P
	The bending radius of the cable shall be at least 10 times the diameter of the cable		P

IEC 60204-1			
Clause	Requirement - Test	Result - Remark	Verdict
	Flexible cables of machines shall be so installed or protected as to minimize the possibility of external damage (run over, forces, rubbing, heat, etc.)		P
	Cables close to moving parts, shall maintain a space of at least 25 mm between the moving parts and the cables or barriers are provided		P
	Cable handling systems: Lateral cable angles not exceeding 5°, at being wound on and off cable drums or approaching and leaving cable guidance devices. The bending radius shall be in accordance with Table 8		P
	Flexible conduit shall not be used for connections subject to rapid or frequent movements except when specifically designed for that purpose		P
13.4.4	Where several machine-mounted devices are connected in series or in parallel, it is recommended that the connections between those devices be made through terminals forming intermediate test points		P
13.4.5	**Plug/socket combinations**		—
	Components or devices inside an enclosure, terminated by fixed plug/socket combinations (no flexible cable), or components connected to a bus system by a plug/socket combination, are excluded		N/A
	Where the plug/socket contains a contact for the protective bonding circuit, it shall have a first make last break contact (see also 8.2.4).		N/A
	Plug/socket combinations intended to be connected or disconnected during load conditions shall have sufficient load-breaking capacity		N/A
	Where the plug/socket combination is rated at 30 A, or greater, it shall be interlocked		N/A
	Plug/socket combinations that are rated at more than 16 A shall have a retaining means to prevent unintended or accidental disconnection.		N/A
	Where an unintended or accidental disconnection of plug/socket combinations can cause a hazardous situation, they shall have a retaining means.		N/A

IEC 60204-1			
Clause	Requirement - Test	Result - Remark	Verdict
	The installation of plug/socket combinations shall fulfil the following requirements as applicable: a)The component which remains live after disconnection shall have a degree of protection of at least IP2X or IPXXB – Metallic housings of plug/socket combinations shall be connected to the protective bonding circuit – Plug/socket combinations intended to carry power loads but not to be disconnected during load conditions shall have a retaining means to prevent unintended or accidental disconnection and shall be clearly marked accordingly – Where more than one plug/socket combination is provided in the same electrical equipment, the associated combinations shall be clearly identifiable. Mechanical coding is recommended – Plug/socket combinations used in control circuits shall fulfil the applicable requirements of IEC 61984. Exception: combinations in accordance with IEC 60309-1, only those contacts shall be used for control circuits which are intended for those purposes. This exception does not apply to control circuits using high frequency signals superimposed on the power circuits.		N/A
13.4.6	Where it is necessary that wiring be disconnected for shipment, terminals or plug/socket combinations shall be provided at the sectional points.		N/A
13.4.7	When spare conductors are provided, they shall be connected to spare terminals or isolated to prevent contact with live parts		N/A
13.5	**Ducts, connection boxes and other boxes**		—
	Ducts shall provide a degree of protection (see IEC 60529) suitable for the application		P
	No sharp edges, flash, burrs, rough surfaces, or threads with which the insulation of the conductors can come into contact		P
	Where human passage is required, least 2 m above the working surface		N/A
	Where cable trays are only partially covered, the cables used shall be of a type suitable for installation on open cable trays.		N/A

IEC 60204-1			
Clause	Requirement - Test	Result - Remark	Verdict
13.5.2	Rigid metal conduit and fittings shall be of galvanized steel or of a corrosion-resistant material		P
	Fittings shall be compatible with the conduit and should be threaded		P
	Conduit bends shall be properly made		P
13.5.3	A flexible metal conduit shall consist of a flexible metal tubing or woven wire armour		N/A
13.5.4	Flexible non-metallic conduit shall be resistant to kinking		N/A
13.5.5	Cable trunking systems external to enclosures shall be rigidly supported and clear of all moving and of sources of contamination		N/A
	Where furnished in sections, the joints shall fit tightly but need not be gasketed		N/A
	The only openings permitted shall be those required for wiring or for drainage		N/A
13.5.6	The use of compartments or cable trunking systems within the column or base of a machine to enclose conductors is permitted provided they are isolated from coolant or oil reservoirs and are entirely enclosed		N/A
	Conductors shall be so secured		N/A
13.5.7	Connection boxes and other boxes used for wiring purposes shall be accessible for maintenance.		N/A
	Those boxes shall provide protection against the ingress of solid bodies and liquids		N/A
	They shall not have opened but unused knockouts nor any other openings		N/A
13.5.8	Motor connection boxes shall enclose only connections to the motor and motor-mounted devices (e.g. brakes, temperature sensors		P
14	**ELECTRIC MOTORS AND ASSOCIATED EQUIPMENT**		—
14.1	Electric motors should conform to the relevant parts of IEC 60034 series	CE marking is provided.	P
14.2	Enclosures for motors should be in accordance with IEC 60034-5	Meet requirements	P

IEC 60204-1			
Clause	Requirement - Test	Result - Remark	Verdict
	The degree of protection shall be dependent on the application and the physical environment		P
14.3	The dimensions of motors shall conform to those given in the IEC 60072 series		P
14.4	Motors and its accessories shall be so mounted that they are adequately protected and are easily accessible for inspection, maintenance, etc.	Meet requirements	P
	Proper cooling shall be ensured and the temperature rise shall remain within the limits of the insulation class (see IEC 60034-1)		P
	There shall be no opening between the motor compartment and any other compartment that does not meet the motor compartment requirements		P
14.5	The characteristics of motors and associated equipment shall be selected in accordance with the anticipated service and physical environmental conditions	Meet requirements	P
14.6	Operation of the overload and overcurrent protective devices for mechanical brake actuators shall initiate the simultaneous de-energization (release) of the associated machine actuators	Meet requirements	P
15	**SOCKET-OUTLETS AND LIGHTING**		—
15.1	For socket-outlets intended for accessory equipment, the following apply:		—
	- they should conform to IEC 60309-1. Where not practicable, they should be clearly marked with the voltage and current ratings		N/A
	- the continuity of the protective bonding circuit to the socket-outlet shall be ensured		N/A
	- all unearthed conductors connected to the socket-outlet shall be protected against overcurrent and, when required, overload		N/A
	– where the power supply to the socket-outlet is not disconnected by the supply disconnecting device for the machine or the section of the machine, the requirements of 5.3.5 apply		N/A
	– where fault protection is provided by automatic disconnection of supply, the disconnection time shall be in accordance with Table A.1 for TN systems or Table A.2 for TT systems		N/A

IEC 60204-1			
Clause	Requirement - Test	Result - Remark	Verdict
	–socket-outlets with a rating not exceeding 20 A shall be provided with an RCD not exceeding 30 mA		N/A
15.2	**Local lighting of the machine and of the equipment**		—
15.2.1	The ON/OFF switch shall not be incorporated in the lampholder or in the flexible connecting cord		N/A
	Stroboscopic effects from lights shall be avoided		N/A
15.2.2	The nominal voltage of the local lighting circuit shall not exceed 250 V between conductors. A voltage not exceeding 50 V is recommended		N/A
	Lighting circuits shall be supplied from one of the following sources:		—
	– a dedicated isolating transformer connected to the supply disconnecting device. Overcurrent protection shall be provided in the secondary circuit		N/A
	– a dedicated isolating transformer connected before the supply disconnecting device. This is permitted for maintenance lighting in control enclosures only. Overcurrent protection shall be provided in the secondary circuit		N/A
	– a circuit of the electrical equipment of the machine for lighting, with dedicated overcurrent protection		N/A
	– an isolating transformer connected before the supply disconnecting device, provided with a dedicated primary disconnecting means (see 5.3.5) and secondary overcurrent protection, and mounted within the control enclosure adjacent to the supply disconnecting device		N/A
	– an externally supplied lighting circuit (for example factory lighting supply). This shall be permitted in control enclosures only, and for the machine work light(s) where their total power rating is not more than 3 kW		N/A
	– power supply units, for DC supply to LED light sources, fitted with isolating transformers		N/A
	Exception: where fixed lighting is out of reach of operators during normal operations, the provisions of this 15.2.2 do not apply		N/A
15.2.3	Local lighting circuits shall be protected in accordance with 7.2.6		N/A
15.2.4	Adjustable lighting fittings shall be suitable for the physical environment		N/A

IEC 60204-1			
Clause	Requirement - Test	Result - Remark	Verdict
	The lampholders shall be:		N/A
	– in accordance with the relevant IEC standard		N/A
	– constructed with an insulating material protecting the lamp cap so as to prevent unintentional contact		N/A
	Reflectors shall be supported by a bracket and not by the lampholder		N/A
	Exception: where fixed lighting is out of reach of operators during normal operations, the provisions of this 15.2.4 do not apply		N/A
16	**MARKING, WARNING SIGNS AND REFERENCE DESIGNATIONS**		—
16.1	Warning signs, nameplates, markings, labels and identification plates shall be of sufficient durability	See the instruction manual.	P
16.2.1	Enclosures that do not otherwise clearly show that they contain electrical shall be marked with the graphical symbol ISO 7010-W012		P
	It may be omitted (see also 6.2.2 b)) for: • an enclosure equipped with a supply disconnecting device • an operator-machine interface or control station • a single device with its own enclosure (for example position sensor)		P
16.2.2	Where the risk assessment shows the need to warn against the possibility of hazardous surface temperatures, the graphical symbol ISO 7010-W017 shall be used		P
16.3	Control devices and visual indicators, shall be clearly and durably marked with regard to their functions	They are have the clearly marking.	P

IEC 60204-1			
Clause	Requirement - Test	Result - Remark	Verdict
16.4	The following information shall be legibly and durably marked - plainly visible after installation on enclosures that receive incoming power supplies: • name or trade mark of supplier • certification mark or other marking where applicable • type designation or model, where applicable • serial number where applicable • main document number (see IEC 62023) where applicable • rated voltage, number of phases and frequency (if AC), and full-load current for each incoming supply It is recommended that this information is provided adjacent to the main incoming supply(ies)	See the nameplate.	P
16.5	All enclosures, assemblies, control devices, and components shall be plainly identified with the same reference designation as shown in the technical documentation		P
17	**TECHNICAL DOCUMENTATION**		—
17.1	The information necessary for identification, transport, installation, use, maintenance, decommissioning and disposal of the electrical equipment shall be supplied		P
	Annex I should be considered as guidance for the preparation of information and documents		P
17.2	**Information related to the electrical equipment**		—
	The following shall be supplied:		—
	a) where more than one document is provided, a main document for the electrical equipment as a whole, listing the complementary documents		P
	b) identification of the electrical equipment		P

IEC 60204-1			
Clause	Requirement - Test	Result - Remark	Verdict
	c) information on installation and mounting including: • a description of installation and mounting, and its connection to the electrical and other supplies • short-circuit current rating for each incoming power supply • rated voltage, number of phases and frequency (if AC.), type of distribution system (TT, TN, IT) and full-load current for each incoming supply • any additional electrical supply(ies) requirements (for example maximum supply source impedance, leakage current) for each incoming supply • space required for servicing • installation requirements regarding cooling • environmental limitations (for example lighting, vibration, EMC environment, atmospheric contaminants) • functional limitations (for example peak starting currents and permitted voltage drops) • precautions to be taken for the installation regarding electromagnetic compatibility		P
	d) an instruction for the connection of conductive-parts in the vicinity of the machine to the protective bonding circuit: • metallic pipes • fences • ladders • handrails		P
	e) information on the functioning and operation as applicable: • an overview of the structure of the electrical equipment • procedures for programming or configuring • procedures for restarting after an unexpected stop • a sequence of operation		P

IEC 60204-1			
Clause	Requirement - Test	Result - Remark	Verdict
	f) information on maintenance, as appropriate: a) frequency and method of functional testing b) instructions for safe maintenance and where necessary suspend a safety function and/or protective measure (see 9.3.6) c) guidance on the adjustment, repair, and frequency and method of preventive maintenance d) details of the interconnections subject to replacement e) required special devices or tools; f)spare parts; g) possible residual risks, indication of particular training and specification of personal protective equipment h) instructions to restrict availability of keys or too(s to skilled or instructed persons i)settings (DIP-switches, programmable parameter values, etc); j)information for validation of safety related control functions after repair or modification, and for periodic testing where necessary;		P
	g) information on handling, transportation and storage		P
	h) information for proper disassembly and handling of components		P
18	**VERFICATION**		—
18.1	The extent of verification will be given in the dedicated product standard for a particular machine. Where there is no such standard, the verifications shall always include the items a), b), c) and h) and may include one or more of the items d) to g): a) verification that the electrical equipment complies with its technical documentation b) verification of continuity of the protective bonding circuit (Test 1 of 18.2.2) c) in case of fault protection by automatic disconnection of supply, conditions shall be verified according to 18.2; d) insulation resistance test (see 18.3) e) voltage test (see 18.4) f) protection against residual voltage (see 18.5) g) verification that the relevant requirements of 8.2.6 are met h) functional tests (see 18.6)		—
	The results of the verification shall be documented		—
18.2	Verification of conditions for protection by automatic disconnection of supply		—

IEC 60204-1			
Clause	Requirement - Test	Result - Remark	Verdict
18.2.1	Test 1 verifies the continuity of the protective bonding circuit. Test 2 verifies the conditions for protection by automatic disconnection of the supply in TN systems For TN-systems, those test methods are described in 18.2.2 and 18.2.3; their application for different conditions of supply are specified in 18.2.4 For TT systems, see Clause A.2 For IT systems, see IEC 60364-6		P
	Where RCDs are used in the electrical equipment, their function shall be verified in accordance with the manufacturer's instructions. The test procedure and test interval shall be specified in the maintenance instructions		—
18.2.2	Test 1: Verification of the continuity of the protective bonding circuit		—
	The resistance between the PE terminal (see 5.2 and Figure 4) and relevant points that are part of the protective bonding circuit shall be measured with a current between 0.2 A and approximately 10 A derived from an electrically separated supply source having a maximum no-load voltage of 24 V	See appended table	P
	The resistance measured shall be in the expected range		—
18.2.3	Test 2: Fault loop impedance verification and suitability of the associated overcurrent protective device		—
	The connections of each power supply including the connection of the associated protective conductor to the PE terminal of the machine, shall be verified by inspection		P
	The conditions for the protection by automatic disconnection of supply in accordance with 6.3.3 and Annex A shall be verified by both		P
	– verification of the fault loop impedance by • calculation, **or** • measurement in accordance with A.4, and		P
	b) confirmation that the setting and characteristics of the associated overcurrent protective device are in accordance with the requirements of Annex A, and		P

IEC 60204-1			
Clause	Requirement - Test	Result - Remark	Verdict
	Where a power drive system (PDS) is used, confirmation that the setting and characteristics of the protective device(s) are in accordance with the converter manufacturer's and protective device manufacturer's instructions		P
18.2.4	Application of the test methods for TN-systems		—
	When Test 2 of 18.2.3 is carried out by measurement, it shall always be preceded by Test 1 of 18.2.2		P
	The tests that are necessary for machines of different status are specified in Table 9		P
18.3	**Insulation resistance tests (optional)**		—
	When insulation resistance tests are performed, the insulation resistance measured at 500 V DC between the power circuit conductors and the protective bonding circuit shall be not less than 1 MΩ		P
	If the electrical equipment of the machine contains surge protection devices which are likely to operate during the test, it is permitted to either: – disconnect these devices, or – reduce the test voltage to a value lower than the voltage protection level of the surge protection devices		P
18.4	**Voltage tests (optional)**		—
	The test voltage shall be at a nominal frequency of 50 Hz or 60 Hz.		P
	The maximum test voltage shall have a value of twice the rated supply voltage of the equipment or 1 000 V, whichever is the greater		P
	The test voltage shall be applied between the power circuit conductors and the protective bonding circuit for at least 1 s		P
	Components and devices that are not rated to withstand the test voltage and surge protection devices shall be disconnected		P
18.5	**Protection against residual voltages**		—
	Where appropriate, tests shall be performed to ensure compliance with 6.2.4		P
18.6	**Functional tests**		—
	The functions of electrical equipment shall be tested		P

IEC 60204-1			
Clause	Requirement - Test	Result - Remark	Verdict
18.7	**Retesting**		—
	Where a portion of the machine or its associated equipment is changed or modified, the need for re-verification and testing of the electrical equipment shall be considered		P
A	**ANNEX A (NORMATIVE) FAULT PROTECTION BY AUTOMATIC DISCONNECTION OF SUPPLY**		—
A.1	**Fault protection for machines supplied from TN-systems**		—
A.1.1	Fault protection shall be provided by an overcurrent protective device within a sufficiently short disconnecting time.		P
	5 s is considered sufficiently short for machines that are neither hand-held nor portable.		P
	Where not possible, supplementary protective bonding shall be provided in accordance with A.1.3		P
	For Class 1 hand-held equipment or portable equipment table A.1 specifies the maximum disconnecting times		N/A
A.1.2	Conditions for protection by overcurrent protective devices fulfilled		P
A.1.3	Condition for protection by reducing the touch voltage below 50 V fulfilled		P
A.1.4	Verification of conditions for protection by automatic disconnection of the supply (A.1.2) by		—
	-verification of the characteristics of the associated protective device and		P
	-measurement of the fault loop impedance (Zs)		P
	Exception: Verification of the continuity of the protective conductors may replace the measurement where appropriate		P
A.2	**Fault protection for machines supplied from TT-systems**		—
	Expand if applicable		N/A
B	**ANNEX B (INFORMATIVE) ENQUIRY FORM FOR THE ELECTRICAL EQUIPMENT OF MACHINES**		—
	The use of this form can facilitate an exchange of information between the user and supplier		—

IEC 60204-1			
Clause	Requirement - Test	Result - Remark	Verdict
C	**ANNEX C (INFORMATIVE) EXAMPLES OF MACHINES COVERED BY THIS PART OF IEC 60204**		—
	Non exhaustive list of examples This standard does not apply to machines within the scope of the IEC 60335 series		—
D	**ANNEX D (INFORMATIVE) CURRENT-CARRYING CAPACITY AND OVERCURRENT PROTECTION OF CONDUCTORS AND CABLES**		—
D.2.1	Correction factors for PVC conductors at higher temperatures		—
D.2.2	Methods of installation		—
D.2.3	Grouping and derating factors		—
D.4	Guidance for overcurrent protection of conductors		—
E	**ANNEX E (INFORMATIVE) EXPLANATION OF EMERGENCY OPERATION FUNCTIONS**		—
	Description of emergency stop, start, switching off, switching on		—
F	**ANNEX (INFORMATIVE) GUIDE FOR THE USE OF THIS PART OF IEC 60204**		—
	This standard gives a large number of general requirements that may or may not be applicable to the electrical equipment of a particular machine.		—
G	**ANNEX (INFORMATIVE) COMPARISON OF TYPICAL CONDUCTOR CROSS-SECTIONAL AREAS**		—
	Comparison of the American Wire Gauge (AWG), square millimetres, square inches, and circular mil		—

IEC 60204-1			
Clause	Requirement - Test	Result - Remark	Verdict
H	**ANNEX (INFORMATIVE)** **MEASURES TO REDUCE THE EFFECTS OF ELECTROMAGNETIC INFLUENCES**		—
	Expand if applicable		—
H.3.1	Only electrical equipment which meets the requirements of the appropriate EMC standards, or the EMC requirements of the relevant product standard, should be used		—
I	**ANNEX I (INFORMATIVE)** **DOCUMENTATION / INFORMATION**		—
	Table I.1 gives a list of Documentation / Information that can be applicable		—

1. Continuity of the protective bonding circuit

Review Points	Review Result(mΩ)	Review Current(A)	Voltage Drop(V)
PE-Control Panel	68	10	0.68
PE-Electrical Box	58	10	0.58
PE-Motor1	65	10	0.65
Transformer1	68	10	0.68

2. Insulation Resistance

Review Points	Review Result(MΩ)
PE-Power Inlet	> 2MΩ
PE-Motor1	> 2MΩ
Transformer1	> 2MΩ

3. Withstanding Voltage

Review Points	Breakdown
PE-Power Inlet	No
PE-Motor1	No
Transformer1	No

List of Review equipment used:
(Note: This is an example of the required attachment. Other forms with a different layout but containing similar information are also acceptable.)

Clause	ID of Review equipment	Measurement / Reviewing	Reviewing / measuring equipment / material used	Range used	Calibration due date
4.4	PT-2	Psychrometer-Thermo graph	-10~50°C, 5%~98%R.H	10~50°C, 5%~98% R.H	2022-12-20
4.3	JO-1	Oscilloscope	0~20KVac/ 0~16KVdc, 0 ~ 200MHz,0~200MS	0-500V	2022-12-20
7.4, 11.2.3	JT-4	Chart Recorder	0~1000°C	0-200°C	2022-12-20
17	TM-1	Tape-Measure	0~35 m	0-35m	2022-12-20
12.7.6	XS-1	Digital Caliper	0~200 mm	0-200mm	2022-12-20
18.4	DH-3	Withstanding Voltage Reviewer	0~5KV 0.3-100mA 50/60Hz	2000V ac	2022-12-20
8.2	DA-3	Leakage Current Meter	0-10mA, 0-150V / 0-500V	0-500V ac	2022-12-20
18.4	SW-2	Stop watch	0-99 h	0-99h	2022-12-20
18.3	INSU-01	Insulation resistance meter	0-500 M ohm	0-500 Mohm	2022-12-20
8.2	GRD-01	Earthening continuity meter	0-10 ohm	0-2 ohm	2022-12-20
7.4, 11.2.3	TH-1	Thermocouple	0-1000°C, type K	0-200°C	2022-12-20

3.4 ATTACHMENT TO TEST REPORT IEC 60204-1

ATTACHMENT TO TEST REPORT IEC 60204-1 EUROPEAN GROUP DIFFERENCES AND NATIONAL DIFFERENCES Safety of machinery - Electrical equipment of machines Part 1: General requirements	
Differences according to.....:	EN 60204-1:2018
Attachment Form No..... :	EU_GD_IEC60204_1B
Attachment Originator.....:	Eurofins Electrosuisse
Master Attachment..... :	2019-03-15
Copyright © 2019 IEC System for Conformity Testing and Certification of Electrical Equipment (IECEE), Geneva, Switzerland. All rights reserved.	

	CENELEC COMMON MODIFICATIONS (EN)		
1.	Scope		—
	– are sewing machines, units, and systems; NOTE 7 For sewing machines, see EN 60204-31. – are hoisting machines. NOTE 8 For hoisting machines, see EN 60204-32.		—
3.	Terms and definitions		-
3.56	Uncontrolled stop NOTE This definition does not imply any particular state of other (for example, non-electrical) stopping devices, for example, mechanical or hydraulic brakes that are outside the scope of this standard.		-
4.2	Section of equipment		P
4.2.2	The electrical equipment of the machine shall satisfy the safety requirements identified by the risk assessment of the machine. Depending upon the machine, its intended use and its electrical equipment, the designer may select parts of the electrical equipment of the machine that are in compliance with EN 60439-1 and, as necessary, other relevant parts of the EN 60439 series (see also Annex F).		P
4.4	Physical environment and operating conditions		P

4.4.1	The electrical equipment shall be suitable for the physical environment and operating conditions of its intended use. The requirements of 4.4.2 to 4.4.8 cover the physical environment and operating conditions of the majority of machines covered by this part of EN 60204. When special conditions apply or the limits specified are exceeded, an agreement between user and supplier (see 4.1) is recommended (see Annex B).		P
4.4.3	Electrical equipment shall be capable of operating correctly in the intended ambient air temperature. The minimum requirement for all electrical equipment is correct operation between air temperatures of +5 °C and +40 °C. For very hot environments (for example hot climates, steel mills, paper mills) and for cold environments, additional measures are recommended (see Annex B).		P
4.4.7	When equipment is subject to radiation (for example microwave, ultraviolet, lasers, X-rays), additional measures shall be taken to avoid malfunctioning of the equipment and accelerated deterioration of the insulation. A special agreement is recommended between the supplier and the user (see Annex B).	No radiation subjected.	N
4.4.8	Undesirable effects of vibration, shock and bump (including those generated by the machine and its associated equipment and those created by the physical environment) shall be avoided by the selection of suitable equipment, by mounting it away from the machine, or by provision of anti-vibration mountings. A special agreement is recommended between the supplier and the user (see Annex B).		P
5.	Incoming supply conductor terminations and devices for disconnecting and switching off		P
5.1	Add: See 17.8 for the provision of instructions for maintenance.		—
5.4	NOTE 2 Further information on the location and actuation of devices such as those used for the prevention of unexpected start-up is provided in EN 60447. After the fifth paragraph, replace note 2 with: NOTE 3 The selection of a device should take into account, for example, information derived from the risk assessment, intended use and foreseeable misuse of the device. For example, the use of disconnectors, withdrawable fuse links		—

<table>
<tr><td>9.</td><td colspan="2">Control circuits and control functions</td><td>P</td></tr>
<tr><td>9.2.6.3</td><td colspan="2">Enabling control (see also 10.9) is a manually activated control function interlock that:</td><td>—</td></tr>
<tr><td></td><td>a) when activated allows a machine operation to be initiated by a separate start control</td><td></td><td>N</td></tr>
<tr><td></td><td>b) when de-activated
– initiates a stop function in accordance with 9.2.5.3, and
– prevents initiation of machine operation.</td><td></td><td>N</td></tr>
<tr><td></td><td>Enabling control shall be so arranged as to minimize the possibility of defeating, for example by requiring the de-activation of the enabling control device before machine operation may be reinitiated. It should not be possible to defeat the enabling function by simple means.</td><td></td><td>N</td></tr>
<tr><td>9.2.7.3</td><td colspan="2">Stop:</td><td>—</td></tr>
<tr><td></td><td>Cableless control stations shall include a separate and clearly identifiable means to initiate the stop function of the machine or of all the operations that can cause a hazardous situation. The actuating means to initiate this stop function shall not be marked or labelled as an emergency stop device (see10.7).</td><td></td><td>P</td></tr>
<tr><td>10.</td><td colspan="2">Operator interface and machine-mounted control devices</td><td>P</td></tr>
<tr><td></td><td colspan="2">Replace table 2 with

Table 2 – Colour coding for push-button actuators and their meanings
<table><tr><th>Colour</th><th>Meaning</th><th>Explanation</th><th>Examples of application</th></tr><tr><td>RED</td><td>Emergency</td><td>Actuate in the event of a hazardous situation or emergency</td><td>Emergency stop
Initiation of emergency function (see also 10.2.1)</td></tr><tr><td>YELLOW</td><td>Abnormal</td><td>Actuate in the event of an abnormal condition</td><td>Intervention to suppress abnormal condition
Intervention to restart an interrupted automatic cycle</td></tr><tr><td>BLUE</td><td>Mandatory</td><td>Actuate for a condition requiring mandatory action</td><td>Reset function</td></tr><tr><td>GREEN</td><td>Normal</td><td>Actuate to initiate normal conditions</td><td>(See 10.2.1)</td></tr><tr><td>WHITE</td><td rowspan="3">No specific meaning assigned</td><td rowspan="3">For general initiation of functions except for emergency stop</td><td>START/ON (preferred)
STOP/OFF</td></tr><tr><td>GREY</td><td>START/ON
STOP/OFF</td></tr><tr><td>BLACK</td><td>START/ON
STOP/OFF (preferred)</td></tr></table></td><td>P</td></tr>
<tr><td>12.</td><td colspan="2">Conductors and cables</td><td>P</td></tr>
<tr><td>12.7.8</td><td colspan="2">Construction and installation of conductor wire, conductor bar systems and slip-ring assemblies</td><td>—</td></tr>
</table>

	The protective bonding circuit shall include the covers or cover plates of metal enclosures or underfloor ducts. Where metal hinges form a part of the bonding circuit, their continuity shall be verified (see Clause 18).		P
17.	Technical documentation		P
17.2	Information to be provided 3) information on the physical environment (for example lighting, vibration, atmospheric contaminants) where appropriate;		P
18.	Verification		P
18.1	General (5th paragraph) For tests in accordance with 18.2 and 18.3, measuring equipment in accordance with the EN 61557 series is applicable. NOTE For other tests as required by this standard measuring equipment in accordance with relevant IEC or European Standards should be used.		P

ZA	**ANNEX ZA, Normative references to IEC standards (normative)**	P
	Normative references to international publications with their corresponding European publications The following referenced documents are indispensable for the application of this document. For dated references, only the edition cited applies. For undated references, the latest edition of the referenced document (including any amendments) applies. NOTE When an international publication has been modified by common modifications, indicated by (mod), the relevant EN/HD applies.	—

ZZ	ANNEX ZZ, Essential requirements EC directives (informative)	P
	Coverage of Essential Requirements of EC Directives This European Standard has been prepared under a mandate given to CENELEC by the European Commission and the European Free Trade Association and within its scope the standard covers only the following essential requirements out of those given in Annex I of the EC Directive 98/37/EC: – 1.1.2 – 1.2 – 1.5.1 – 1.5.4 – 1.6.3 (for isolation of electrical supplies of machinery) – 1.6.4 (for access to electrical equipment) – 1.7.0 – 1.7.1 – 1.7.2 (for residual risks of an electrical nature) – 1.7.4(c) Compliance with this standard provides one means of conformity with the specified essential requirements of the Directive concerned. WARNING: Other requirements and other EC Directives may be applicable to the products falling within the scope of this standard.	—

Annex：Technical Information

File No：MD-TCF-220406-38043

Applicant:

Zhejiang Haobang Communication Technology Co. , Ltd.

Address of applicant:

No.818 Biyun Street, Bihu Town, Liandu District, Lishui City, Zhejiang Province, China

A.1 Declaration of conformity
A.2 Safety pictures of the machine

Legal Person：_____

Product: Fiber Cleaver
Model: 0708, 0709, 0711, 0712, 0713, 0715, 1716, 1717, 1718, A01, A02, C12, C15, C16, 0808, 0809, G6, G7, G8, G9, G10

ANNEX 1:EC DECLARATION OF CONFORMITY

THIS IS HEREBY DECLARED THAT FOLLOWING DESIGNATED PRODUCT COMPLIED WITH THE ESSENTIAL HEALTH AND SAFETY REQUIREMENTS OF MACHINE DIRECTIVE 2006/42/EC ON THE APPROXIMATION OF THE LAWS OF THE MEMBER STATES RELATING TO IT.

MANUFACTURER

Zhejiang Haobang Communication Technology Co. , Ltd.

No.818 Biyun Street, Bihu Town, Liandu District, Lishui City, Zhejiang Province, China

AUTHORIZED REPRESENTATIVE ESTABLISHED WITHIN THE EU ☐

COMPANY NAME:

COMPANY ADDRESS:

DESCRIPTION OF MACHINERY

PRODUCT NAME: Fiber Cleaver

MODEL TYPE: 0708, 0709, 0711, 0712, 0713, 0715, 1716, 1717, 1718, A01, A02, C12, C15, C16, 0808, 0809, G6, G7, G8, G9, G10

APPLICABLE STANDARDS

EN ISO 12100:2010, EN 60204-1:2018, EN ISO 13849-1:2015

THIS DECLARATION APPLIES TO ALL SPECIMENS MANUFACTURED IDENTICAL TO THE MODEL SUBMITTED FOR TESTING / EVALUATION. ASSESSMENT OF COMPLIANCE OF THE PRODUCT WITH THE REQUIREMENTS RELATING TO SAFETY STANDARDS LISTED ABOVE WAS PERFORMED BY MANUFACTURER.

CE

SIGNED ON BEHALF OF

SIGNATURE:_____

TITLE: Person in Charge of Technical

PLACE: China

DATE: 2022/04/11

ANNEX 2: SAFETY PICTURES OF THE MACHINE

Type of equipment: Model:	Fiber Cleaver, 0708, 0709, 0711, 0712, 0713, 0715, 1716, 1717, 1718, A01, A02, C12, C15, C16, 0808, 0809, G6, G7, G8, G9, G10

Details of:	
View: [X] general [ ] front [ ] rear [ ] right [ ] left [ ] top [ ] bottom	

Details of:	
View: [X] general [ ] front [ ] rear [ ] right [ ] left [ ] top [ ] bottom	

Details of:	
View: [X] general [ ] front [ ] rear [ ] right [ ] left [ ] top [ ] bottom	

- End of Report -

High Precision Fiber Cleaver Instruction Manual

⚠ Attention — Please Read Me Before Operation

- ○Keep the product in dry and clean place at ordinary temperature.
- ○Don't get the product wet or hit heavily.
- ○Don' twipe the rubber pad with alcohol.
- ○Please clean the dirt on pressure board regularly.
- ○Constantly clean the collector and ensure no dust and oil dirties inside.

● Product Specifications And Structure

Product Model	Fiber Cleaver
Applicable Bare Fiber Diameter	125μm
Applicable Fiber Core	Singe Core
Fiber Cutting Length	10+mm
Average Cutting Angle	≤0.8°
Blade Life	32000+Times ※(1000 Timesx16 Position * 2-3 Adjustable Height)
Dimension	63Wx65Dx60H(mm)
Weight	205g
Fiber Fixture	Four In One Fixture
Package	Box/User Manual/Allen Key
Optional Accessories	Collector/Multifunctional Fixture

▼Structure

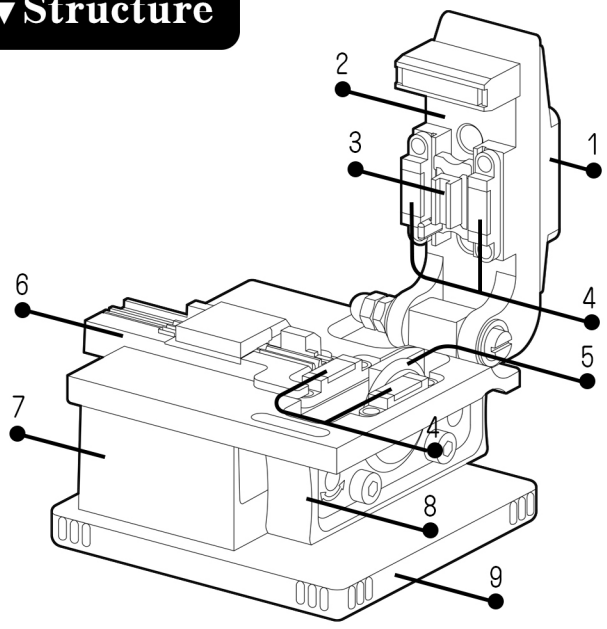

1.Plastic Cover 2. Cover Plate 3.Block
4. Optical Fiber Rubber Pad 5. Blade 6.Fiber Fixture
7. Base 8. Slider 9.Non-slip Mat

● Replacement And Adjustment Of Blade

Tips:
0-16 Cutting points are indicated on the blade. Please clean the blade and fiber fixture when the blade can not be used, if it still doesn't work, the cutting point of the blade is completely worn, please adjust the position of the blade.

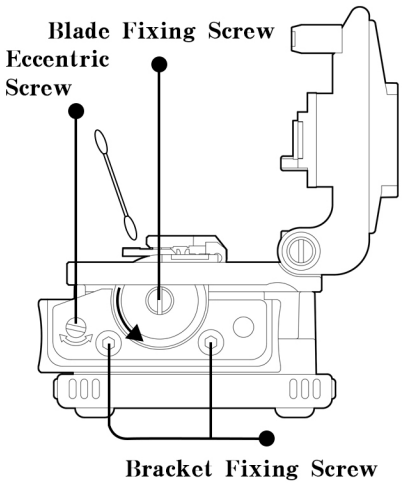

▼Blade Position Changing Method

1. Prepare one slotted screwdriver("—" type screwdriver), loosen blade fixing screw.
2. Rotate the blade to new position.

Tips:

Press the blade by a cotton swab and rotate the blade counterclockwise.

▼Blade Height Adjustment Method

1. Loosen the below two Bracket fixing screw by allen key.
2. Slightly adjust the eccentric screw, clockwise to lift blade, counterclockwise is to lower blade height.
3. Put the fiber which remove coating layer into fixture, press the cover board, push the block back and forth and check if the blade touch the fibers lightly. Adjust the proper position and fix the screw.

▸Replace Blade

1. Loosen blade fixing screw, remove the old blade with plastic tweezers, install new blade.
2. Adjust blade height according the method of blade height adjusting.

● Cutting Step

①

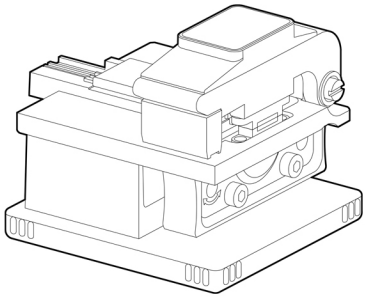

Fiber cleaver initial state.

②

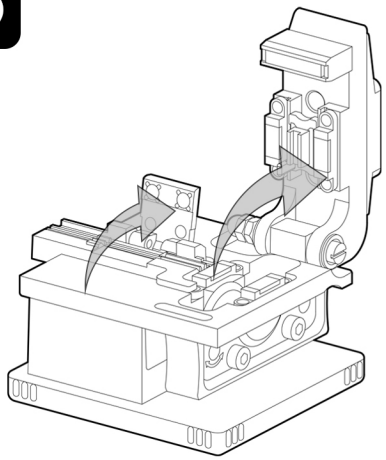

Open the cover plate and fixture cover.

③

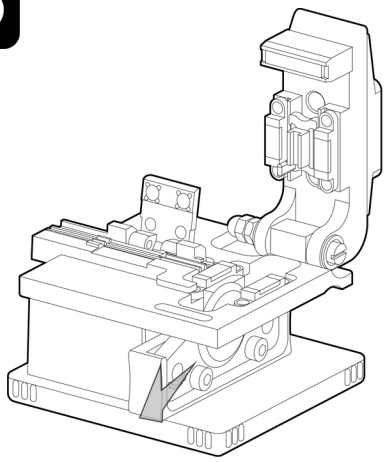

Push the slider to the front.

④

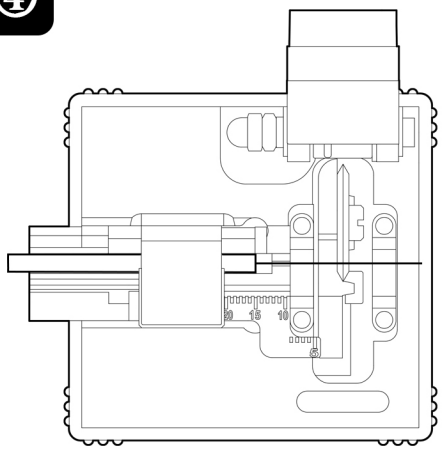

Align the scales and make sure the fiber in horizontal state.

⑤

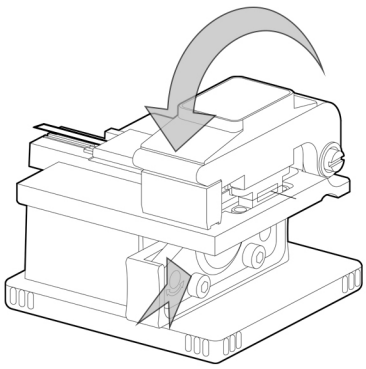

Close the cover and push the block to cut fiber.

⑥

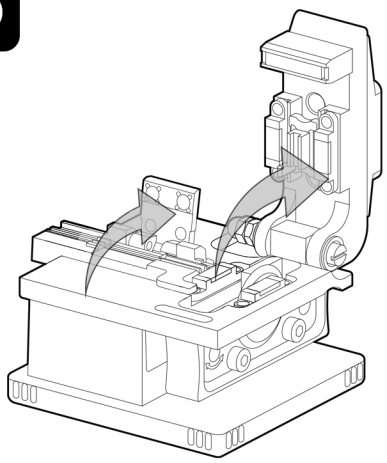

Open the fixture cover, take out the fiber.

220316